YAMAHA

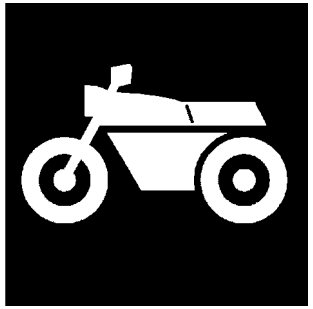

PARTS CATALOGUE
CATALOGO DE REPUESTOS

GPD155-A (BBE1) COLOMBIA

YAMAHA
GENUINE
Parts & Accessories

1WBBE-261S1

( )

GPD155-A
CATALOGO DE REPUESTOS
©2020 por Yamaha Motor Co., Ltd.
1ª edición, noviembre 2020
Todos los derechos reservados.
Toda reproducción o uso no autorizado
sin el consentimiento escrito de
Yamaha Motor Co., Ltd.
quedan expresamente prohibidos
Impreso en Japón.

GPD155-A
PARTS CATALOGUE
©2020 by Yamaha Motor Co., Ltd.
1st edition, November 2020
All rights reserved.
Any reprinting or unauthorized use
without the written permission of
Yamaha Motor Co., Ltd.
is expressly prohibited.
Printed in Japan.

PROLOGO

Este catálogo de repuestos corresponde a las piezas para el o los modelos que figuran en la página de portada. Al formular el pedido de repuestos, se ruega citar este catálogo y especificar correctamente el número y el nombre de las piezas.

1. Las modificaciones y agregados que se hayan realizado después de la edición de este Catálogo de Repuestos, serán anunciados en las Informaciones de Recambios.
   Es recomendable que se hagan las correcciones necesarias en el Catálogo de Repuestos de acuerdo con las Informaciones de Recambios.

2. Abreviaciones
   En este. Catálogo de Repuestos se emplean las siguientes abreviaciones.

   “UR” Usar el número de partes especificado

   “UN” Usar la cantidad necesaria

   “AP” Piezas sustitutivas

   “LM” Fabricación local (Hay que pedir los repuestos en las cercanías)

   “F#” Nº de bastidor (Nº aplicable a la máquina)

   “O/S” Sobredimensionado

3. La cantidad de componentes para el montaje
   - Los componentes, suministrados como conjunto, se describen con un punto (.) que precede al nombre del parte como se indica a continuación.
   - La numeración que aparece a la derecha de cada descripción indica la cantidad de partes por cada unidad de conjunto.

CODIGO Nº	DESCRIPCION	CANT.	OBSERVACIONES
2F5–83310–60	ENSAMBLAJE DE LA LUZ	2	
115–83311–60	.BOMBILLA (6V–18W)	1	

4. Los colores de los componentes se indican como sigue en la columna de “OBSERVACIONES”.

CODIGO Nº	DESCRIPCION	CANT.	OBSERVACIONES
2N4–24110–00–X5	COMP. DEL TANQUE	2	MXR
3J1–24240–10	.GRAFICO, DEL TANQUE	1	PARA MXR

5. Debe tenerse en cuenta que las ilustraciones sirven como guia para la búsqueda de los números de partes y no deben usarse para el montaje. Durante el montaje, se recomienda usar el manual de taller correspondiente.

6. EL asterisco (*) antes del número de referencia indica los elementos modificados después de la primera edición.

FOREWORD

This Parts Catalogue is related to the parts for the model(s) on the cover page. When you are ordering replacement parts, please refer to this Parts Catalogue and quote both part numbers and part names correctly.

1. Modifications or additions which have been made after the issue of the Parts Catalogue will be announced in the Parts News.
   It is advisable that you make the necessary corrections to the Parts Catalogue according to the Parts News.

2. Abbreviations
   The following abbreviations are used in this Parts Catalogue.

   "UR" Use specified parts number.

   "UN" Use as many as needed.

   "AP" Alternate Parts

   "LM" Locally Made (Parts need to be ordered locally)

   "F#" Frame No. (Applicable machine No.)

   "O/S" Over Size

3. The number of components for assembly
   - Parts, which are to be supplied in an assembly, are listed with a dot (.) in front of the part name as shown below.
   - The numeral appearing to the right of each component part indicates the quantity of parts for each assembly unit.

PART NO.	DESCRIPTION	Q'TY	REMARKS
2F5–83310–60	FRONT FLASHER LIGHT ASSY	2	
115–83311–60	.BULB (6V–18W)	1	

4. Applicable colours of graphics are represented in the "REMARKS" as shown below.

PART NO.	DESCRIPTION	Q'TY	REMARKS
2N4–24110–00–X5	FUEL TANK COMP.	2	MXR
3J1–24240–10	.GRAPHIC, FUEL TANK	1	FOR MXR

5. Note that the illustrations for reference in finding parts numbers are not to be used for assembling. When assembling, please use the applicable service manual.

6. The asterisk (*) before a reference number indicates modified items after the first edition.

7. Números de serie

Nº de Serie del bastidor

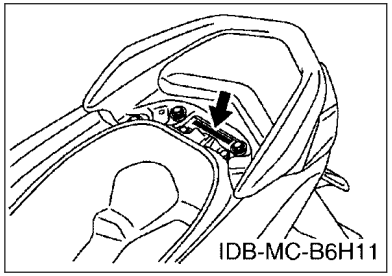

Nº de Serie del motor

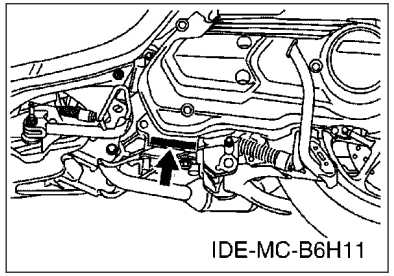

8. Códigos de color aplicables (El símbolo (*) muestra el color de modelo.)

Abreviatura	Nombre de color	Código de color
BWM1(*)	BLUISH WHITE METALLIC 1	1357
DPBML(*)	DARK PURPLISH BLUE METALLIC L	0865
MBL2(*)	MAT BLACK 2	0582
MNM3	MAT GRAY METALLIC 3	1278
SM12	BLACK METALLIC 12	1723
SMX	BLACK METALLIC X	0903
YB	YAMAHA BLACK	0033

9. Nº de serie inicial aplicable

Nº de Serie del bastidor

Nº de serie	Nombre de la columna de cantidades	Código de Modelo

Nº de Serie del motor

Nº de serie	Nombre de la columna de cantidades	Código de Modelo

7. Applicable Serial No.

Frame Serial No.

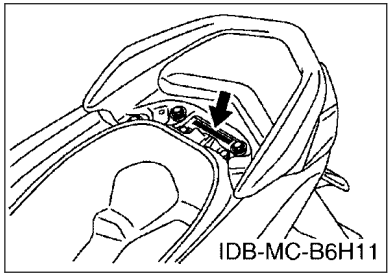

Engine Serial No.

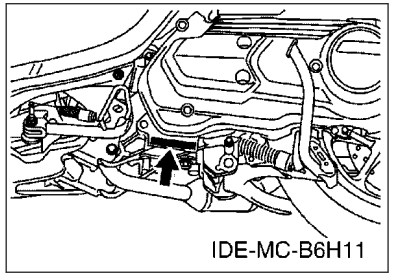

8. Applicable Colour Code (The (*) mark shows Model colour.)

Abbreviation	Colour Name	Colour Code
BWM1(*)	BLUISH WHITE METALLIC 1	1357
DPBML(*)	DARK PURPLISH BLUE METALLIC L	0865
MBL2(*)	MAT BLACK 2	0582
MNM3	MAT GRAY METALLIC 3	1278
SM12	BLACK METALLIC 12	1723
SMX	BLACK METALLIC X	0903
YB	YAMAHA BLACK	0033

9. Applicable Starting Serial No.

Frame Serial No.

Serial No.	Name Of Q'ty Column	Model Code

Engine Serial No.

Serial No.	Name Of Q'ty Column	Model Code

CONTENIDO

MOTOR

CILINDRO....1
CIGUENAL & PISTON....3
VALVULA....4
ARBOL DE LEVAS & CADENA....5
BOMBA DE AGUA....6
RADIADOR & MANGUERA....7
BOMBA DE ACEITE....9
ADMISION....10
DESCARGA....12
CARTER....13
CUBIERTA DE CARTER 1....15
EMBRAGUE....16
TRANSMISION....18

SHASIS

CUADRO....19
GUARDABARRO....20
CUBIERTA LATERAL....21
BRAZO TRASERO & SUSPENSION....23
DIRECCION....24
DEPOSITO DE COMBUSTIBLE....26
ASIENTO....27
RUEDA DELANTERA....29
CALIBRE FRENO DELANTERA....30
RUEDA TRASERA....31
CALIBRE FRENO TRASERA....32
MANILLAR & CABLE....33
CILINDRO MAESTRO DELANTERO....34
SOPORTE & APOYAPIE....36
PATA PROTEGIDA....39
PARABRISAS....42
GENERADOR....43
LUZ DE DESTELLADOR....44
MEDIDOR....45
FARO DELANTERO....46
LUZ DE COLA....47
INTERRUPTOR DE MANILLAR&PALANC....48
EQUIPO ELECTRICO 1....49
EQUIPO ELECTRICO 2....51
EQUIPO ELECTRICO 3....52

INDICE

INDICE NUMERICO....53

CONTENTS

ENGINE

CYLINDER....1
CRANKSHAFT & PISTON....3
VALVE....4
CAMSHAFT & CHAIN....5
WATER PUMP....6
RADIATOR & HOSE....7
OIL PUMP....9
INTAKE....10
EXHAUST....12
CRANKCASE....13
CRANKCASE COVER 1....15
CLUTCH....16
TRANSMISSION....18

CHASSIS

FRAME....19
FENDER....20
SIDE COVER....21
REAR ARM & SUSPENSION....23
STEERING....24
FUEL TANK....26
SEAT....27
FRONT WHEEL....29
FRONT BRAKE CALIPER....30
REAR WHEEL....31
REAR BRAKE CALIPER....32
STEERING HANDLE & CABLE....33
FRONT MASTER CYLINDER....34
STAND & FOOTREST....36
LEG SHIELD....39
WINDSHIELD....42
GENERATOR....43
FLASHER LIGHT....44
METER....45
HEADLIGHT....46
TAILLIGHT....47
HANDLE SWITCH & LEVER....48
ELECTRICAL 1....49
ELECTRICAL 2....51
ELECTRICAL 3....52

INDEX

NUMERICAL INDEX....53

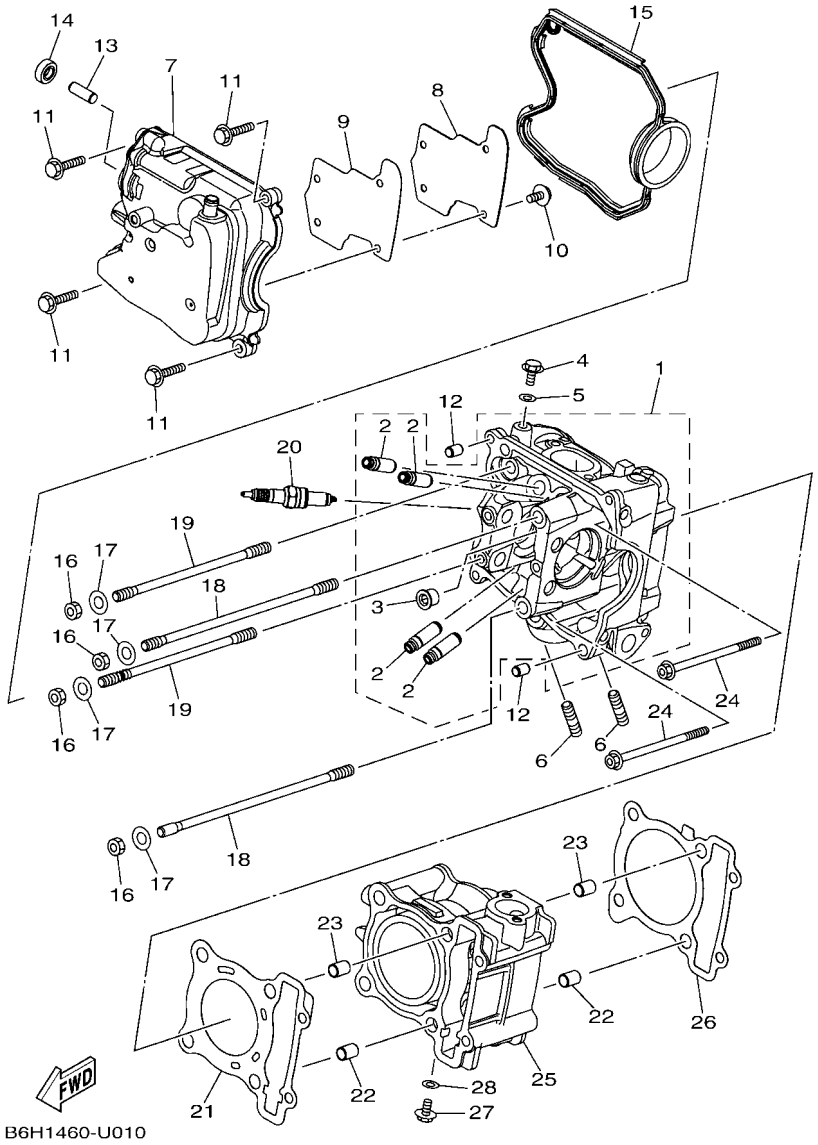

FIG. 1 CILINDRO — CYLINDER

REF. Nº	CODIGO Nº PART NO.	DESCRIPCION DESCRIPTION	BBE1					OBSERVACIONES REMARKS
1	B6H–E1102–00	CULATA DE CILINDRO COMPLETA CYLINDER HEAD ASSY	1					
2	2DP–E1133–10	.GUIA DE VALVULA 1 .GUIDE, VALVE 1	4					
3	90340–12813	.TORNILLO, DE DRENAJE .PLUG, STRAIGHT SCREW	1					
4	95E32–06010	CERROJO, REBORDE HUECO PROFUND BOLT, FLANGE DEEP RECESS	1					
5	90430–06803	JUNTA GASKET	1					
6	95612–08618	PERNO DE PUNTAL BOLT, STUD	2					
7	2DP–E1191–00	TAPA CULATA DE CILINDRO 1 COVER, CYLINDER HEAD 1	1					
8	2DP–E1165–00	PLACA RESPIRADERO PLATE, BREATHER	1					
9	2DP–E1169–00	EMAPQ CBTA.DE RESP. GASKET, BREATHER COVER	1					
10	90149–05801	TORNILLO DE REGLAJE SCREW	4					
11	95E32–06030	CERROJO, REBORDE HUECO PROFUND BOLT, FLANGE DEEP RECESS	4					
12	99530–08012	PASADOR, DE ESPIGA PIN, DOWEL	2					
13	2DP–E132G–00	VARILLA 1 ROD 1	1					
14	93102–08800	SELLO ACEITE OIL SEAL	1					
15	B3F–E1193–00	EMPAQUE GASKET, HEAD COVER 1	1					
16	95332–08600	TUERCA HEXAGONAL NUT	4					
17	90201–08859	ARANDELA PLANA WASHER, PLATE	4					
18	2DP–E1391–00	PERNO PERNO PRISIONERO 1 BOLT, STUD 1	2					
19	2DP–E1392–00	PERNO PRISIONERO 2 BOLT, STUD 2	2					
20	94700–00415	BUJIA (NGK CPR8EA) PLUG, SPARK (NGK CPR8EA)	1					
21	2DP–E1181–00	JUNTA, DE CULATA 1 GASKET, CYLINDER HEAD 1	1					
22	99530–10114	PASADOR, DE ESPIGA PIN, DOWEL	2					
23	99530–10114	PASADOR, DE ESPIGA PIN, DOWEL	2					
24	90110–06378	TORNILLO ALLEN BOLT, HEXAGON SOCKET HEAD	2					
25	B6H–E1311–00	CILINDRO 1 CYLINDER 1	1					
26	B6H–E1351–00	JUNTA, DE CILINDRO GASKET, CYLINDER	1					
27	95E32–06010	CERROJO, REBORDE HUECO PROFUND BOLT, FLANGE DEEP RECESS	1					

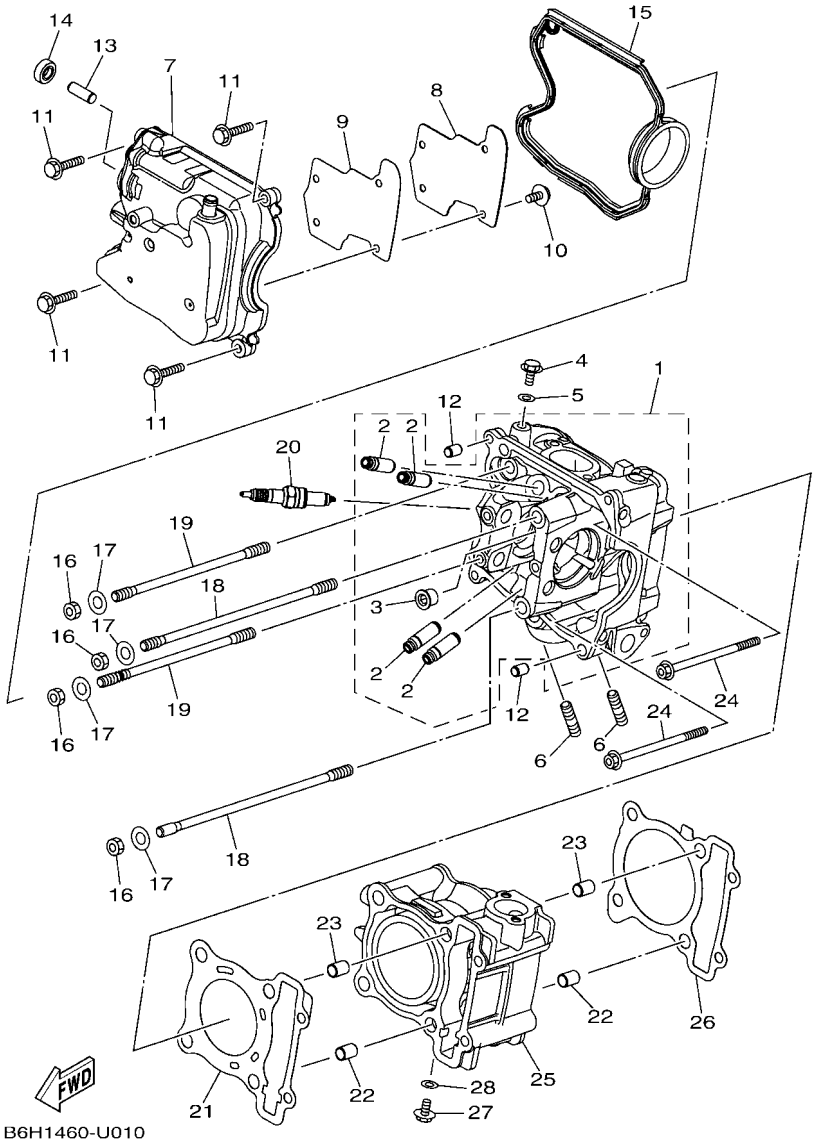

FIG. 1 CILINDRO — CYLINDER

REF. Nº	CODIGO Nº PART NO.	DESCRIPCION DESCRIPTION	BBE1					OBSERVACIONES REMARKS
28	90430–06803	JUNTA GASKET	1					

FIG. 2 CIGUENAL & PISTON — CRANKSHAFT & PISTON

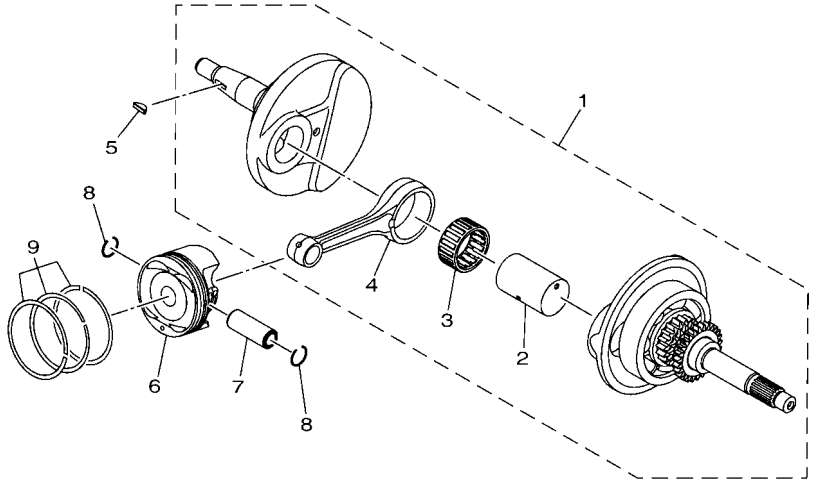

B6H1460-U020

REF. Nº	CODIGO Nº PART NO.	DESCRIPCION DESCRIPTION	BBE1					OBSERVACIONES REMARKS
1	B6H–E1400–10	CIGUENAL COMPLETO CRANKSHAFT ASSY	1					
2	B63–E1681–00	.PASADOR MANIVELA 1 .PIN, CRANK 1	1					
3	93310–528YK	.COJINETE DE RODILLOS .BEARING	1					
4	2DP–E1651–00	.BIELA .ROD, CONNECTING	1					
5	90280–03017	CUNA WOODRUFF KEY, WOODRUFF	1					
6	BK6–E1631–00	PISTON (NORMA) PISTON (STD)	1					
7	2DP–E1633–00	PASADOR, PISTON PIN, PISTON	1					
8	93450–16115	SEGURO CIRCLIP	2					
9	B63–E1603–00	JUEGO DE ANILLOS (NORMA) PISTON RING SET (STD)	1					

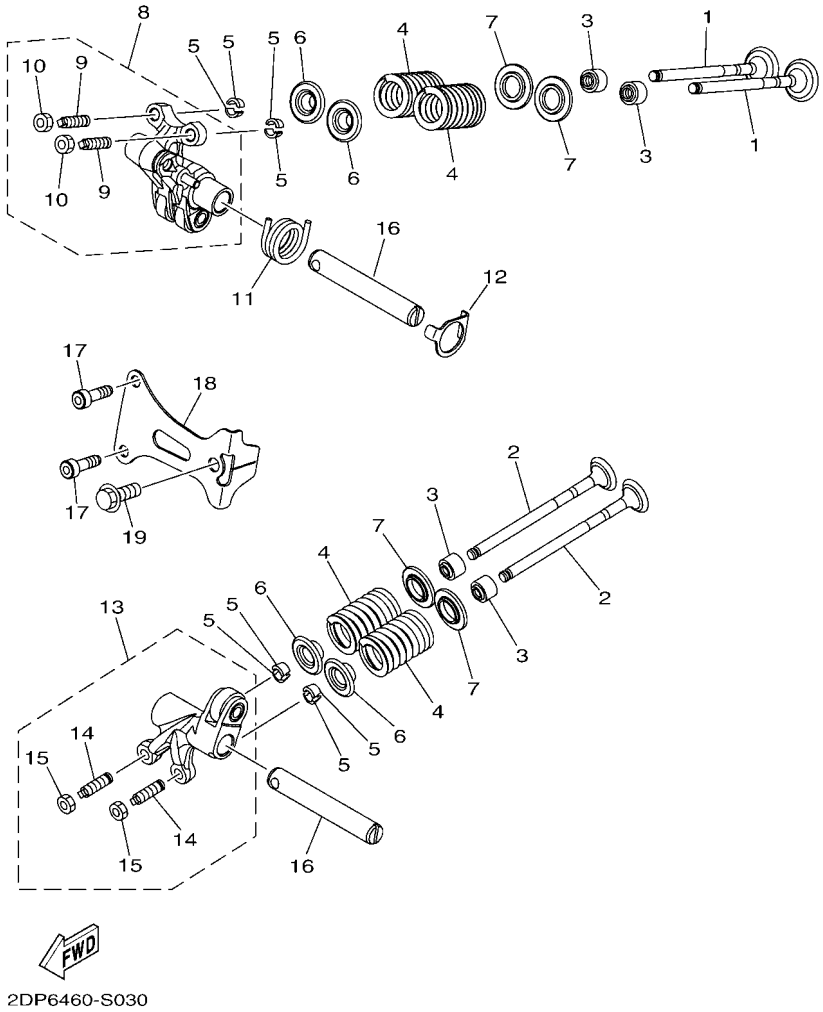

FIG. 3 VALVULA — VALVE

REF. Nº	CODIGO Nº PART NO.	DESCRIPCION DESCRIPTION	BBE1					OBSERVACIONES REMARKS
1	BK6–E2111–00	VALVULA DE ADMISION VALVE, INTAKE	2					
2	B3F–E2121–00	VALVULA DE ESCAPE VALVE, EXHAUST	2					
3	54P–E2119–00	SELLO DE ACEITE VALVULA SEAL, VALVE STEM	4					
4	BB8–E2113–01	RESORTE VALVULA INTERNA SPRING, VALVE INNER	4					
5	5TL–E2118–00	SEGURO DE VALVULA LOCK, VALVE SPRING RETAINER	8					
6	2DP–E2117–00	RETEN RESORTE DE VALVULA RETAINER, VALVE SPRING	4					
7	50C–E2126–00	ASIENTO RESORTE DE VALVULA2 SEAT, VALVE SPRING 2	4					
8	2DP–E2150–00	BRAZO DE BALANCIN DE VALVULA VALVE ROCKER ARM ASSY	1					
9	33S–E2159–01	.TORNILLO DE AJUSTE DE VALVULA .SCREW, VALVE ADJUSTING	2					
10	90170–05803	.TUERCA .NUT	2					
11	BB8–E2226–00	RESORTE SPRING, COIL	1					
12	2DP–E2279–00	PLACA PLATE	1					UR EITHER CAN USE UR EITHER CAN USE
	B63–E2279–00	PLACA PLATE	1					UR EITHER CAN USE UR EITHER CAN USE
13	B6H–E2160–00	BRAZO DE BALANCIN DE VALVULA 2 VALVE ROCKER ARM ASSY 2	1					
14	33S–E2159–01	.TORNILLO DE AJUSTE DE VALVULA .SCREW, VALVE ADJUSTING	2					
15	90170–05803	.TUERCA .NUT	2					
16	B65–E2156–00	EJE DE BALANCIN SHAFT, ROCKER 2	2					
17	91312–05016	TORNILLO ALLEN BOLT, HEXAGON SOCKET HEAD	2					
18	2DP–E111F–00	PLACA PLATE	1					UR EITHER CAN USE UR EITHER CAN USE
	B63–E111F–00	PLACA PLATE	1					UR EITHER CAN USE UR EITHER CAN USE
19	95E32–06014	CERROJO, REBORDE HUECO PROFUND BOLT, FLANGE DEEP RECESS	1					

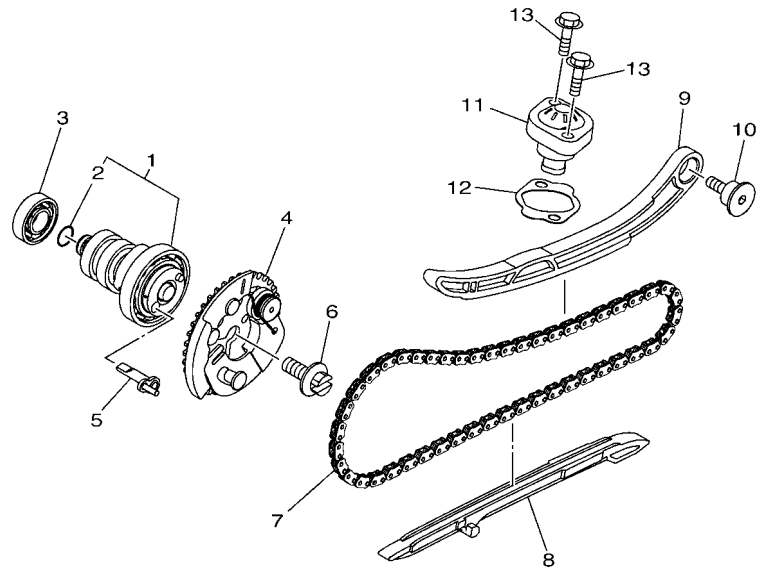

B6H1460-U040

FIG. 4 ARBOL DE LEVAS & CADENA — CAMSHAFT & CHAIN

REF. Nº	CODIGO Nº PART NO.	DESCRIPCION DESCRIPTION	BBE1					OBSERVACIONES REMARKS
1	B6H–E2170–00	ARBOL DE LEVAS COMPLETO 1 CAMSHAFT ASSY 1	1					
2	93210–09806	.ANILLO O .O-RING	1					
3	93306–001YG	COJINETE BEARING	1					
4	B6H–E2280–00	EQUIPO DE DESCOMPRESION DECOMPRESSION ASSY	1					
5	B6H–E2288–00	LEVA DE DESCOMPRESION CAM, DECOMPRESSION	1					UR EITHER CAN USE UR EITHER CAN USE
	2DP–E2288–00	LEVA DE DESCOMPRESION CAM, DECOMPRESSION	1					UR EITHER CAN USE UR EITHER CAN USE
6	5YP–E2157–01	PERNO BOLT	1					
7	94568–F9096	CADENA CHAIN (DID SCR-0404 SV)	1					
8	B65–E2231–00	TOPE DE GUIA 1 GUIDE, STOPPER 1	1					
9	B6H–E2241–00	TOPE DE GUIA 2 GUIDE, STOPPER 2	1					
10	1DB–E2228–00	PERNO BOLT	1					
11	2PV–E2210–01	TENSOR CADENA DE LEVA TENSIONER ASSY, CAM CHAIN	1					
12	B6H–E2213–00	EMPAQUE DE CAJA TENSOR GASKET, TENSIONER CASE	1					
13	95E32–06020	CERROJO, REBORDE HUECO PROFUND BOLT, FLANGE DEEP RECESS	2					

FIG. 5 BOMBA DE AGUA — WATER PUMP

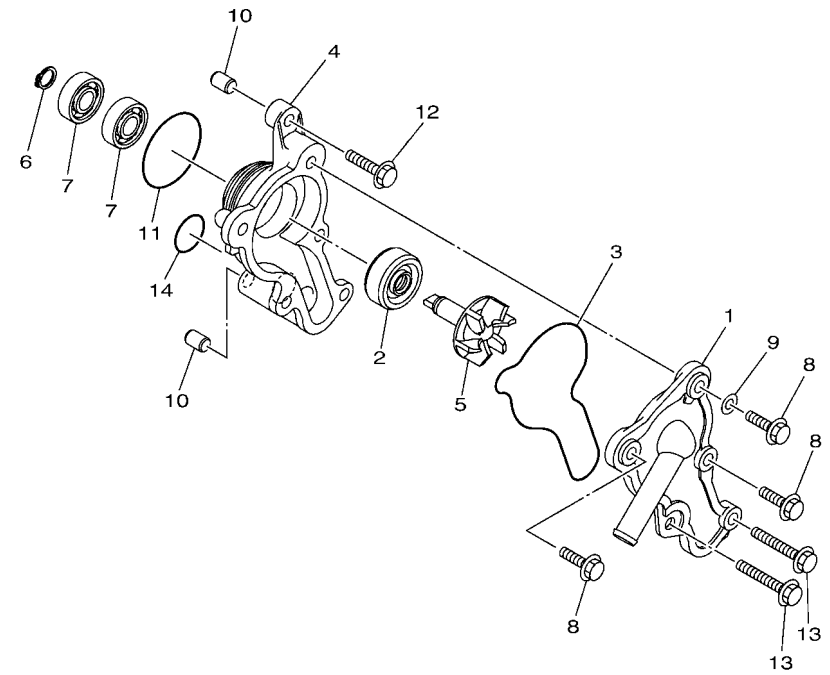

B6H1460-U050

REF. Nº	CODIGO Nº PART NO.	DESCRIPCION DESCRIPTION	BBE1					OBSERVACIONES REMARKS
1	B6H–E2422–00	CUBIERTA DE CAJA COVER, HOUSING	1					
2	B6H–E2223–00	SELLO SEAL	1					
3	B6H–E2439–00	ANILLO O O-RING	1					
4	B6H–E1185–00	CUBIERTA CULATA CIL.LAT.3 COVER, CYLINDER HEAD SIDE 3	1					
5	B6H–E2450–00	EJE IMPULSOR COMPLETO IMPELLER SHAFT ASSY	1					
6	99009–08400	PRESILLA REDONDA CIRCLIP	1					
7	93300–608X0	COJINETE BEARING	2					
8	95027–06020	PERNO, DE BRIDA BOLT, FLANGE	3					
9	90430–06803	JUNTA GASKET	1					
10	99530–08012	PASADOR, DE ESPIGA PIN, DOWEL	2					
11	93210–39803	ANILLO O O-RING	1					
12	95E32–06025	CERROJO, REBORDE HUECO PROFUND BOLT, FLANGE DEEP RECESS	1					
13	95E32–06045	CERROJO, REBORDE HUECO PROFUND BOLT, FLANGE DEEP RECESS	2					
14	93210–19809	ANILLO O O-RING	1					

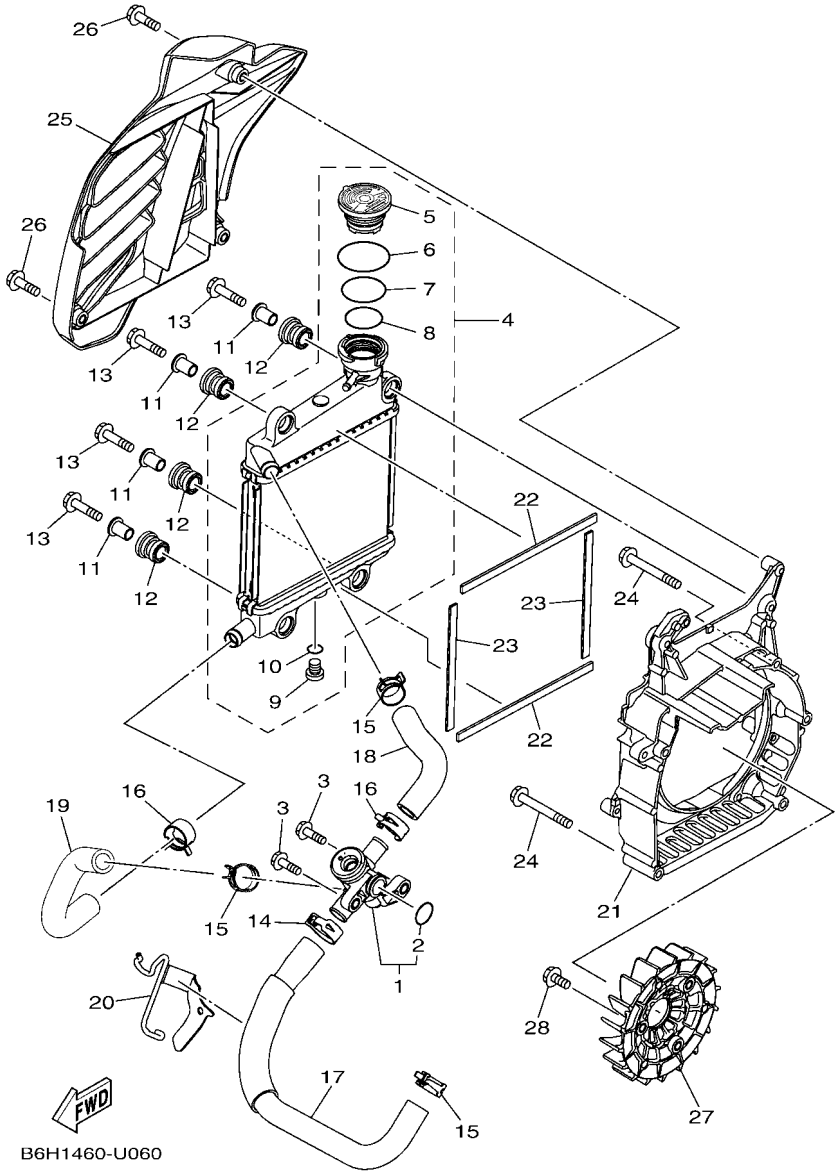

FIG. 6 RADIADOR & MANGUERA — RADIATOR & HOSE

REF. Nº	CODIGO Nº PART NO.	DESCRIPCION DESCRIPTION	BBE1					OBSERVACIONES REMARKS
1	2DP–E2410–00	TERMOSTATO CONJUNTO THERMOSTAT ASSY	1					
2	52S–12439–00	.ANILLO O .O-RING	1					
3	95E32–06020	CERROJO, REBORDE HUECO PROFUND BOLT, FLANGE DEEP RECESS	2					
4	B6H–E240A–01	RADIADOR COMPLETO RADIATOR ASSY	1					
5	B65–E2462–02	.TAPON, DEL RADIADOR .CAP, RADIATOR	1					
6	B63–E22A2–00	.ANILLO O .O-RING	1					
7	B63–E2439–00	.ANILLO O .O-RING	1					
8	B63–E2843–00	.ANILLO EN O (ND) .O-RING	1					
9	5ST–E2615–00	.GRIFO DE DRENAJE .COCK, DRAIN	1					
10	5ST–E2843–00	.ANILLO EN O (ND) .O-RING	1					
11	90387–08823	ESPACIADOR COLLAR	4					
12	90480–14833	TAPON GROMMET	4					
13	95D32–06030	CERROJO, REBORDE HUECO PROFUND BOLT, FLANGE DEEP RECESS	4					
14	90467–20806	PRESILLA CLIP	1					
15	90467–19803	PRESILLA CLIP	3					
16	90467–19803	PRESILLA CLIP	2					
17	B6H–E2481–00	TUBO 1 PIPE 1	1					
18	B6H–E2482–00	TUBO 2 PIPE 2	1					
19	B6H–E2483–00	TUBO 3 PIPE 3	1					
20	B6H–E2491–00	GRAMPA 1 CLAMP 1	1					
21	B6H–E2621–00	CAJA VENTILADOR CASE, FAN	1					
22	90520–10853	EQUILIBRIO, CUBIERTA DAMPER, PLATE	2					
23	90520–10855	EQUILIBRIO, CUBIERTA DAMPER, PLATE	2					
24	95E32–06050	CERROJO, REBORDE HUECO PROFUND BOLT, FLANGE DEEP RECESS	5					
25	B6H–E2467–00	CUBIERTA DEL RADIADOR COVER, RADIATOR	1					
26	95E32–06020	CERROJO, REBORDE HUECO PROFUND BOLT, FLANGE DEEP RECESS	3					
27	B65–E2611–00	VENTILADOR FAN	1					

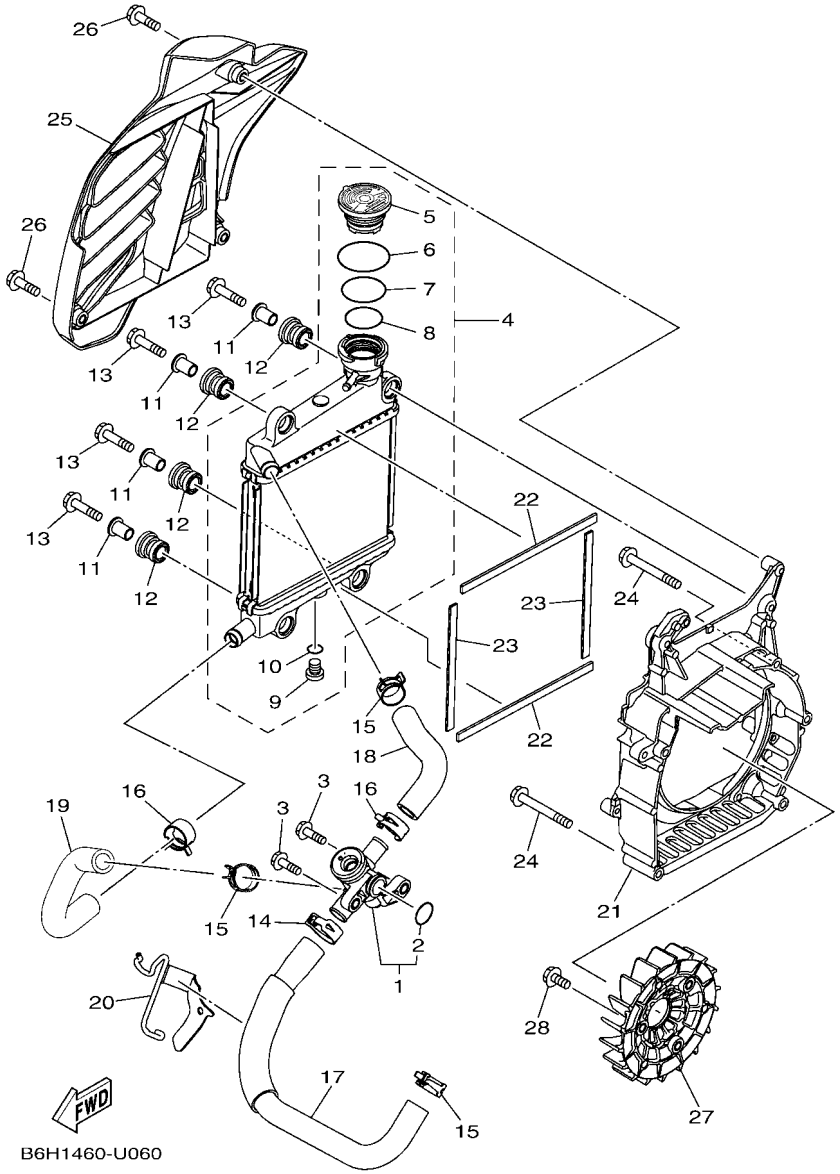

FIG. 6 RADIADOR & MANGUERA — RADIATOR & HOSE

REF. Nº	CODIGO Nº PART NO.	DESCRIPCION DESCRIPTION	BBE1					OBSERVACIONES REMARKS
28	95D32–06016	CERROJO, REBORDE HUECO PROFUND BOLT, FLANGE DEEP RECESS	3					

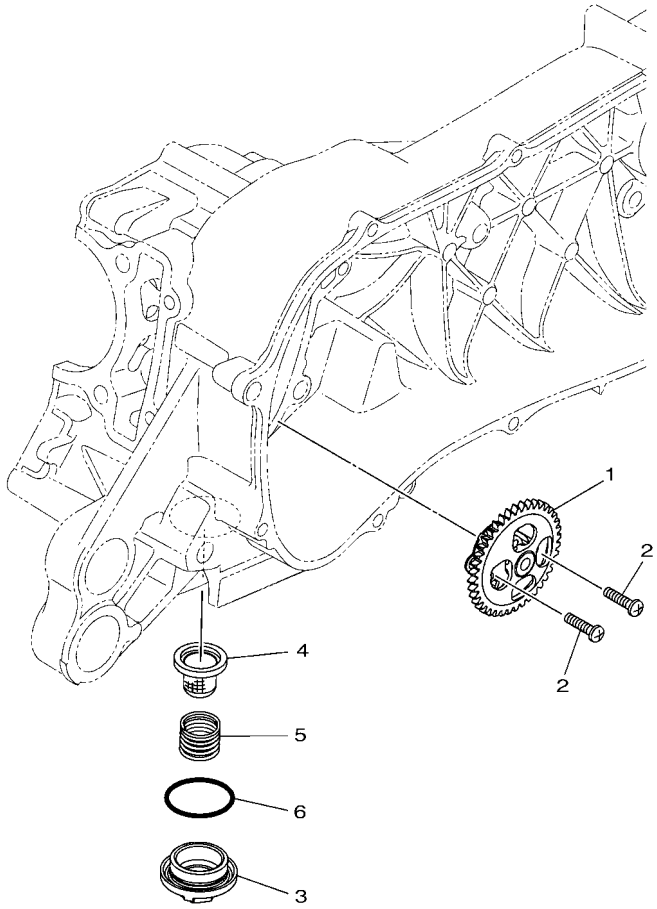

B6H1460-U070

FIG. 7 BOMBA DE ACEITE — OIL PUMP

REF. Nº	CODIGO Nº PART NO.	DESCRIPCION DESCRIPTION	BBE1					OBSERVACIONES REMARKS
1	B65–E3300–01	BOMBA DE ACEITE COMPLETA OIL PUMP ASSY	1					
2	98502–05020	TORNILLO SCREW, PAN HEAD	2					
3	54P–E5351–00	TAPON DE DRENAJE PLUG, DRAIN	1					
4	54P–E3411–00	FILTRO DE ACEITE STRAINER, OIL	1					
5	90501–16004	RESORTE DE COMPRESION SPRING, COMPRESSION	1					
6	93210–29800	ANILLO O O-RING	1					

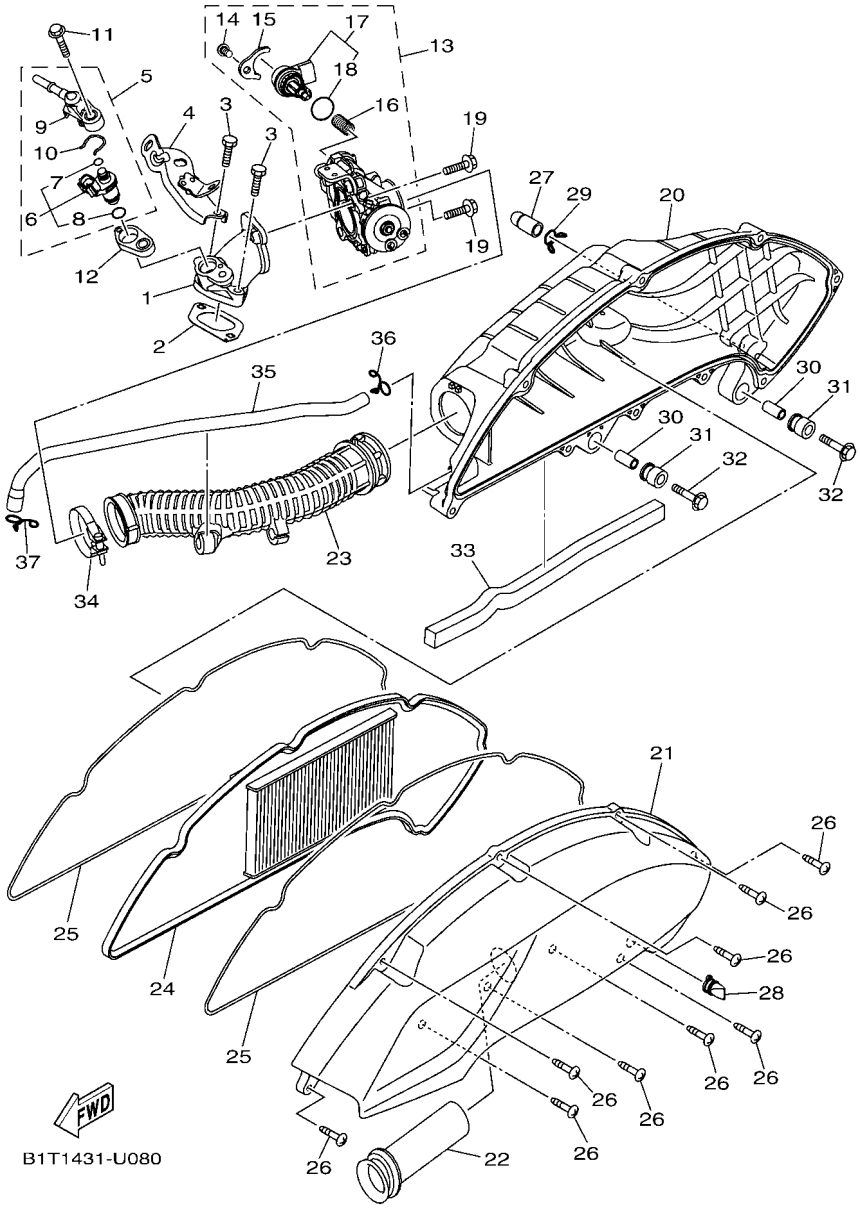

FIG. 8 ADMISION — INTAKE

REF. Nº	CODIGO Nº PART NO.	DESCRIPCION DESCRIPTION	BBE1					OBSERVACIONES REMARKS
1	B6H–E3585–00	MULTIPLE MANIFOLD	1					
2	B6H–E4199–00	EMPAQUE GASKET	1					
3	91332–06025	PERNO BOLT	2					
4	B6H–E4146–00	PLACA SOPORTE PLATE	1					
5	BB8–E3770–10	INYECTOR INJECTOR ASSY	1					
6	BB8–E3761–10	.INYECTOR .INJECTOR	1					
7	54P–E4147–00	..ANILLO O ..O-RING	1					
8	5CA–E4147–00	..ANILLO O ..O-RING	1					
9	54P–E3938–00	.TUBO DE ADMISION .PIPE	1					
10	54P–E4137–00	.PRESILLA .CLIP	1					
11	95D32–06030	CERROJO, REBORDE HUECO PROFUND BOLT, FLANGE DEEP RECESS	1					
12	2DP–E3556–00	EMPAQUE GASKET, MANIFOLD	1					
13	B65–E3750–10	CAJA DE ACELERADOR COMPL. THROTTLE BODY ASSY	1					
14	98502–06012	.TORNILLO .SCREW, PAN HEAD	2					
15	54P–E4243–00	.PLACA .PLATE	1					
16	54P–E4335–00	.RESORTE DE EMBOLO .SPRING, PLUNGER	1					
17	B63–H5801–00	.MOTOR .STEPPING MOTOR	1					
18	54P–E416A–00	..ANILLO O ..O-RING	1					
19	90110–06846	TORNILLO ALLEN BOLT, HEXAGON SOCKET HEAD	2					
20	B6H–E4411–10	CAJA FILTRO DEL AIRE 1 CASE, AIR CLEANER 1	1					
21	B6H–E4412–10	TAPA CAJA DEL FILTRO 1 CAP, CLEANER CASE 1	1					
22	B6H–E4437–00	CONDUCTO DUCT	1					
23	B6H–E4453–00	UNION DEL FILTRO DEL AIRE 1 JOINT, AIR CLEANER 1	1					
24	B6H–E4451–00	ELEMENTO DEL FILTRO DEL AIRE ELEMENT, AIR CLEANER	1					
25	B6H–E4452–00	SELLO SEAL	2					
26	97707–50025	TORNILLO ROSCA HEMBRA SCREW, TAPPING	9					
27	5TL–E443E–00	TUBO, DRENAJE PIPE, DRAIN	1					

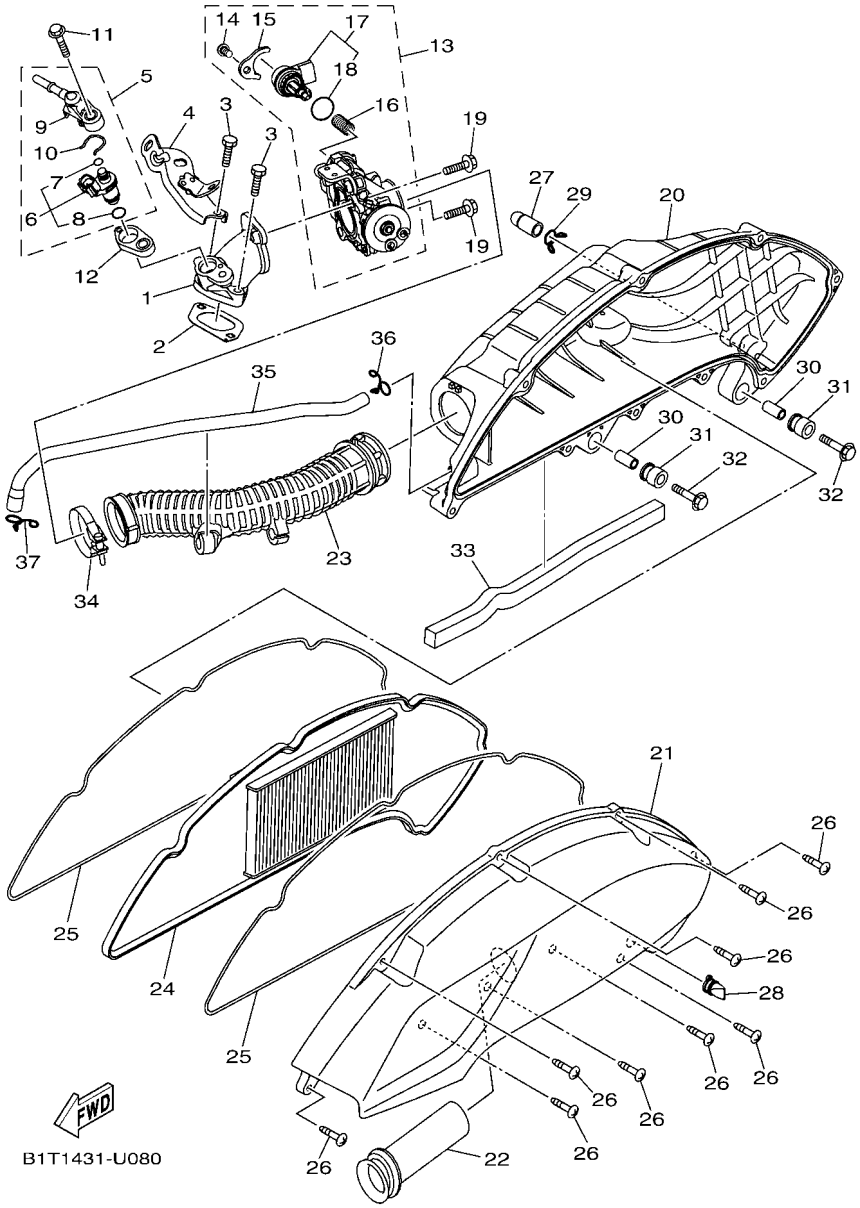

FIG. 8 ADMISION — INTAKE

REF. Nº	CODIGO Nº PART NO.	DESCRIPCION DESCRIPTION	BBE1					OBSERVACIONES REMARKS
28	B5D–E443G–00	TUBO, DRENAJE 2 PIPE, DRAIN 2	1					
29	90467–12809	PRESILLA CLIP	1					
30	B74–E4449–00	COLLAR COLLAR	2					
31	B6H–E4435–00	ANILLO PROTECTOR GROMMET	2					
32	95D32–06030	CERROJO, REBORDE HUECO PROFUND BOLT, FLANGE DEEP RECESS	2					
33	90520–15816	EQUILIBRIO, CUBIERTA DAMPER, PLATE	1					
34	90450–43805	BRIDA, MANGUERA HOSE CLAMP ASSY	1					
35	B6H–E1166–00	TUBO RESPIRADERO 1 PIPE, BREATHER 1	1					
36	90467–11825	PRESILLA CLIP	1					
37	90467–12052	PRESILLA CLIP	1					

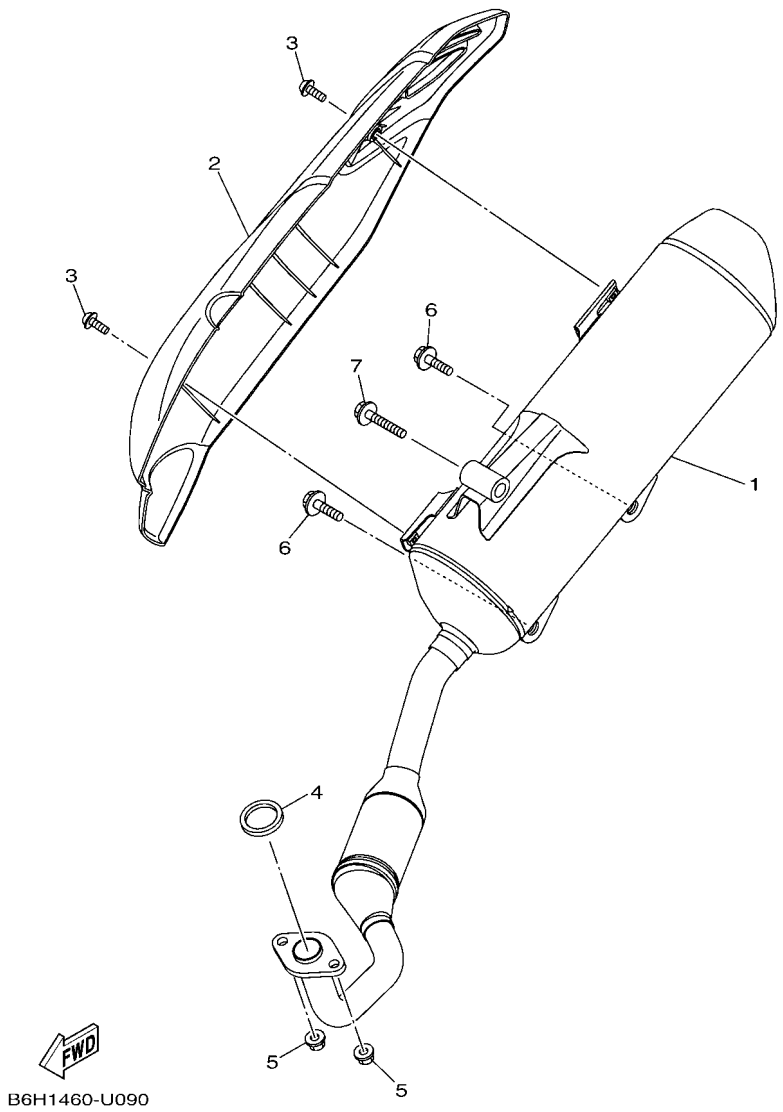

FIG. 9 DESCARGA — EXHAUST

REF. Nº	CODIGO Nº PART NO.	DESCRIPCION DESCRIPTION	BBE1					OBSERVACIONES REMARKS
1	B6H–E4711–00	SILENCIADOR 1 MUFFLER 1	1					
2	B6H–E4718–00	PROTECTOR DE SILENCIADOR 1 PROTECTOR, MUFFLER 1	1					
3	90111–06860	TORNILLO BOLT,HEX. SOCKET BUTTON	2					
4	2DP–E4613–00	JUNTA, TUBO DE ESCAPE GASKET, EXHAUST PIPE	1					
5	95702–08500	TUERCA DE BRIDA NUT, FLANGE	2					
6	95D32–10045	CERROJO, REBORDE HUECO PROFUND BOLT, FLANGE DEEP RECESS	2					
7	95D32–10060	CERROJO, REBORDE HUECO PROFUND BOLT, FLANGE DEEP RECESS	1					

FIG. 10 CARTER — CRANKCASE

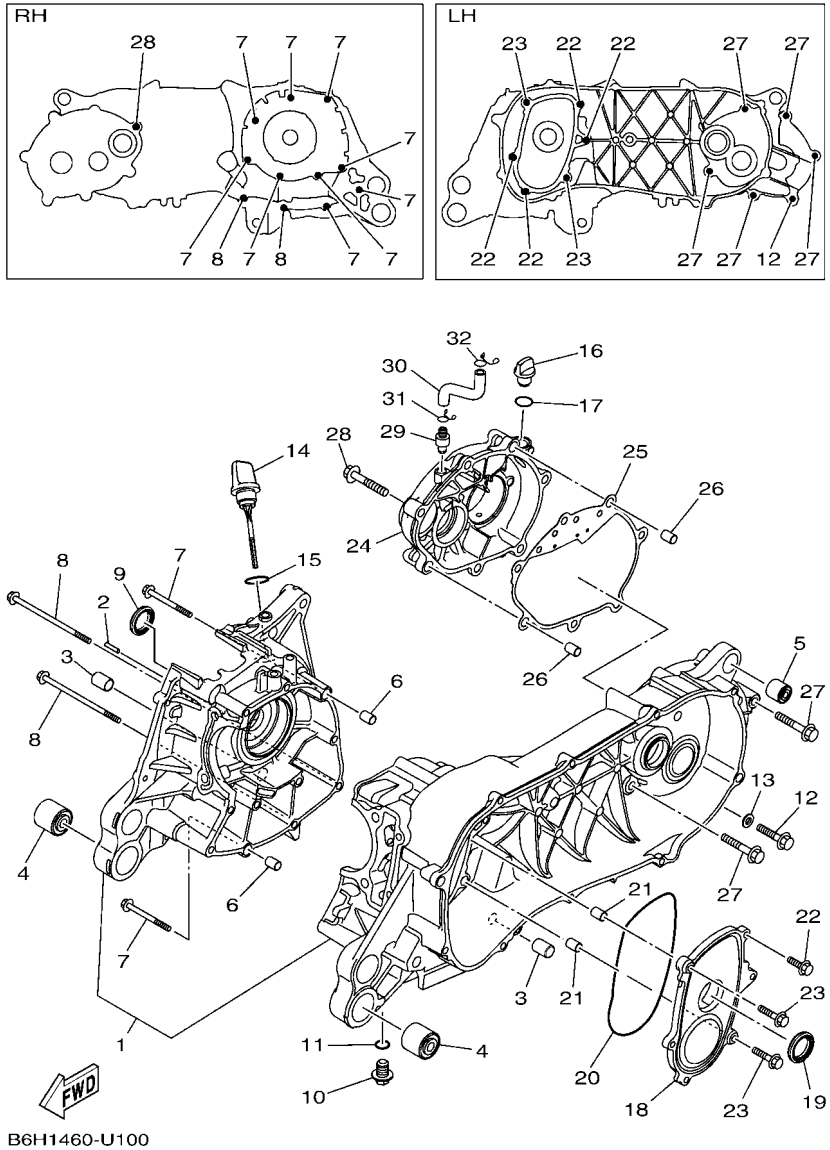

REF. Nº	CODIGO Nº PART NO.	DESCRIPCION DESCRIPTION	BBE1					OBSERVACIONES REMARKS
1	B6H–E5150–00	CARTER COMPLETO CRANKCASE ASSY	1					
2	99480–03012	PASADOR PIN	1					
3	54P–F7121–00	BUJE BUSH	2					
4	90388–10808	AMORTIGUADOR DAMPER	2					
5	5MX–F2216–00	BUJE DEL AMORTIGUADOR TRASERO BUSH, REAR SHOCK ABSORBER	1					UR EITHER CAN USE UR EITHER CAN USE
	90388–08803	AMORTIGUADOR DAMPER	1					UR EITHER CAN USE UR EITHER CAN USE
6	99530–10114	PASADOR, DE ESPIGA PIN, DOWEL	2					
7	95E32–06060	CERROJO, REBORDE HUECO PROFUND BOLT, FLANGE DEEP RECESS	9					
8	95E32–06110	CERROJO, REBORDE HUECO PROFUND BOLT, FLANGE DEEP RECESS	2					
9	93102–22829	SELLO ACEITE OIL SEAL	1					
10	90340–12816	TORNILLO, DE DRENAJE PLUG, STRAIGHT SCREW	1					
11	90430–12803	JUNTA GASKET	1					
12	95D32–08035	CERROJO, REBORDE HUECO PROFUND BOLT, FLANGE DEEP RECESS	1					
13	90430–08804	JUNTA GASKET	1					
14	2DP–E5362–00	TAPON DEL NIVEL DE ACEITE PLUG, OIL LEVEL	1					
15	5LW–E3769–00	ANILLO O O-RING	1					
16	5LW–E5363–00	TAPON DE ACEITE PLUG, OIL	1					
17	93210–14816	ANILLO O O-RING	1					
18	B65–E5423–00	CUBIERTA 2 COVER 2	1					
19	93102–24802	SELLO ACEITE OIL SEAL	1					
20	93211–28800	ANILLO O O-RING	1					
21	99530–10114	PASADOR, DE ESPIGA PIN, DOWEL	2					
22	95E32–06020	CERROJO, REBORDE HUECO PROFUND BOLT, FLANGE DEEP RECESS	4					
23	95E32–06030	CERROJO, REBORDE HUECO PROFUND BOLT, FLANGE DEEP RECESS	2					
24	B6H–E5421–00	TAPA DE CARTER DERECHA COVER, CRANKCASE 2	1					
25	B6H–E5461–10	JUNTA TAPA CARTER DERECHO 2 GASKET, CRANKCASE COVER 2	1					
26	99530–10114	PASADOR, DE ESPIGA PIN, DOWEL	2					

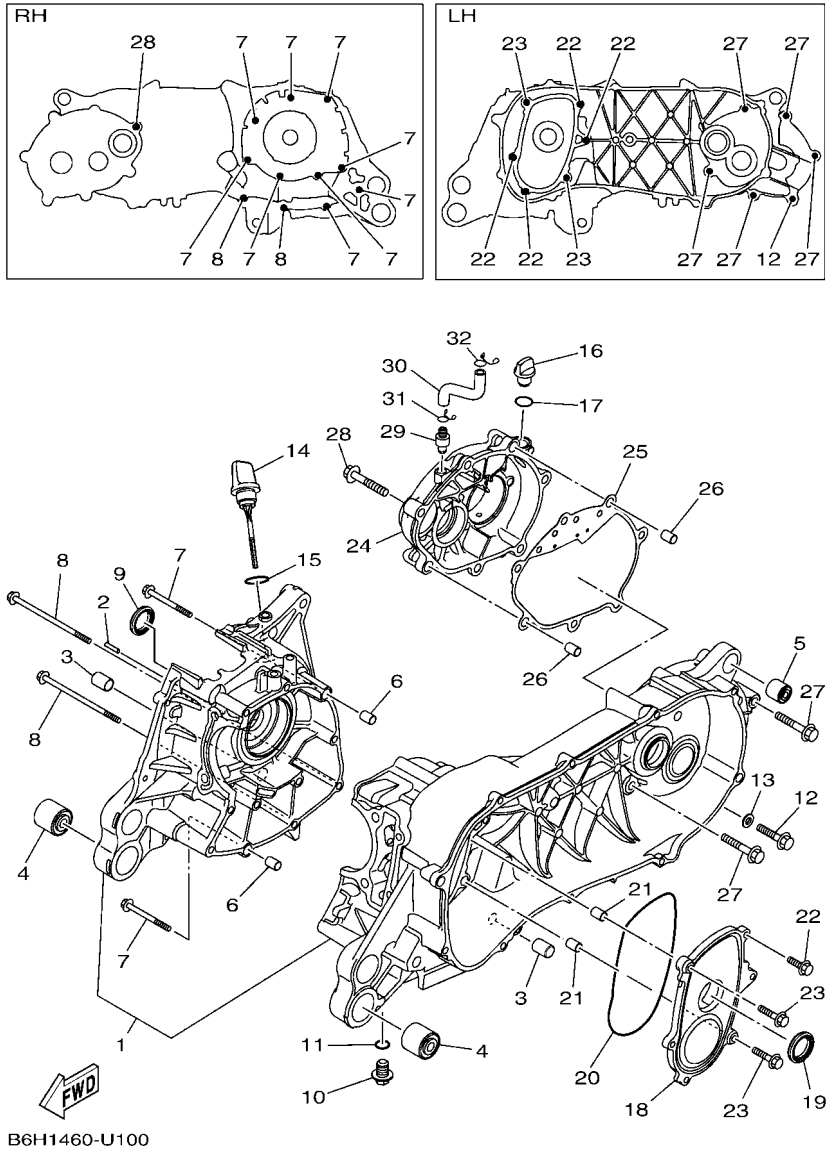

FIG. 10 CARTER — CRANKCASE

REF. Nº	CODIGO Nº PART NO.	DESCRIPCION DESCRIPTION	BBE1					OBSERVACIONES REMARKS
27	95E32–08045	CERROJO, REBORDE HUECO PROFUND BOLT, FLANGE DEEP RECESS	5					
28	95E32–08035	CERROJO, REBORDE HUECO PROFUND BOLT, FLANGE DEEP RECESS	1					
29	B6H–E5371–00	RESPIRADERO BREATHER	1					
30	B6H–E5373–00	MANGUELA DE RESPIRADERO PIPE, BREATHER	1					
31	90467–10008	PRESILLA CLIP	1					
32	90467–11825	PRESILLA CLIP	1					

FIG. 11 CUBIERTA DE CARTER 1 — CRANKCASE COVER 1

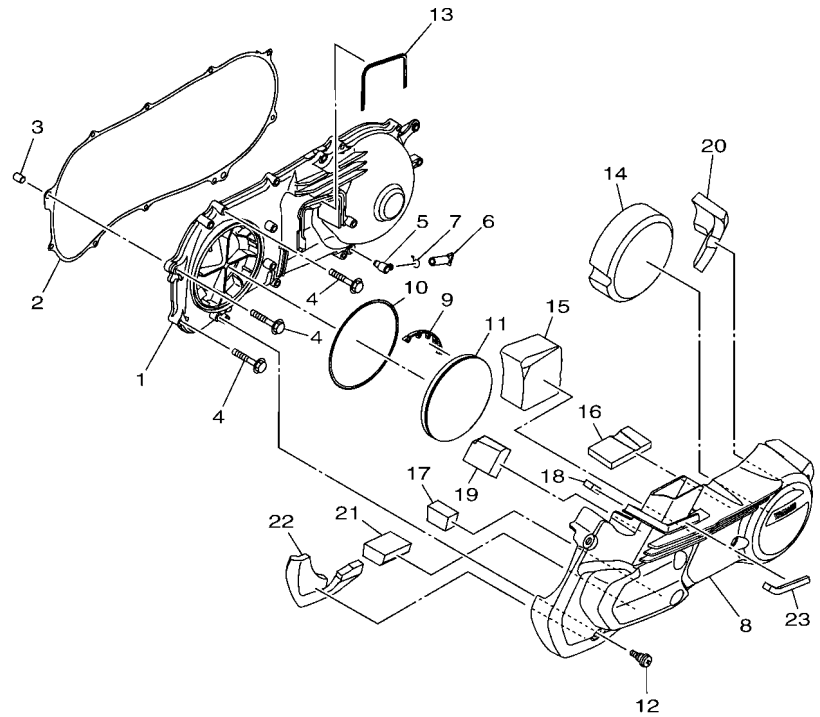

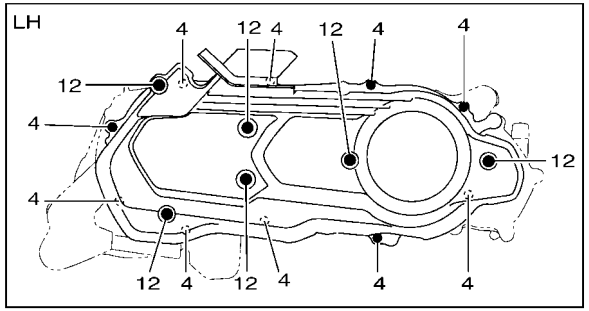

B6H1460-U110

REF. Nº	CODIGO Nº PART NO.	DESCRIPCION DESCRIPTION	BBE1					OBSERVACIONES REMARKS
1	B6H–E5411–00	CUBIERTA DE CARTER 1 COVER, CRANKCASE 1	1					
2	B6H–E5451–00	EMPAQ DE CUBIERTA DE CARTER GASKET, CRANKCASE COVER 1	1					
3	99530–10114	PASADOR, DE ESPIGA PIN, DOWEL	1					
4	95E32–06035	CERROJO, REBORDE HUECO PROFUND BOLT, FLANGE DEEP RECESS	10					
5	5LW–E5371–01	RESPIRADERO BREATHER	1					
6	4ST–E443E–00	TUBO, DRENAJE PIPE, DRAIN	1					
7	90467–11106	PRESILLA CLIP	1					
8	B6H–E5431–00	CUBIERTA DE CARTER 3 COVER, CRANKCASE 3	1					
9	2DP–E5495–00	SELLO DE PROTECTOR 1 SEAL, PROTECTOR 1	1					
10	B65–E5472–00	SELLO DE CONDUCTO DE AIRE SEAL, AIR DUCT	1					
11	2DP–E5407–00	ELEMENTO 1 ELEMENT 1	1					
12	B63–E5481–00	PERNO 1 BOLT 1	6					
13	2DP–E5474–00	SELLO DE CONDUCTO DE AIRE SEAL, AIR DUCT	1					
14	B6H–E5316–00	AMORTIGUADOR 1 DAMPER 1	1					
15	B6H–E5326–00	AMORTIGUADOR 2 DAMPER 2	1					
16	90520–10856	EQUILIBRIO, CUBIERTA DAMPER, PLATE	1					
17	90520–40801	EQUILIBRIO, CUBIERTA DAMPER, PLATE	1					
18	90520–10851	EQUILIBRIO, CUBIERTA DAMPER, PLATE	1					
19	90520–50801	EQUILIBRIO, CUBIERTA DAMPER, PLATE	1					
20	B6H–E533C–00	AMORTIGUADOR 7 DAMPER 7	1					
21	90520–40800	EQUILIBRIO, CUBIERTA DAMPER, PLATE	1					
22	B6H–E533E–00	AMORTIGUADOR 9 DAMPER 9	1					
23	90520–10855	EQUILIBRIO, CUBIERTA DAMPER, PLATE	1					

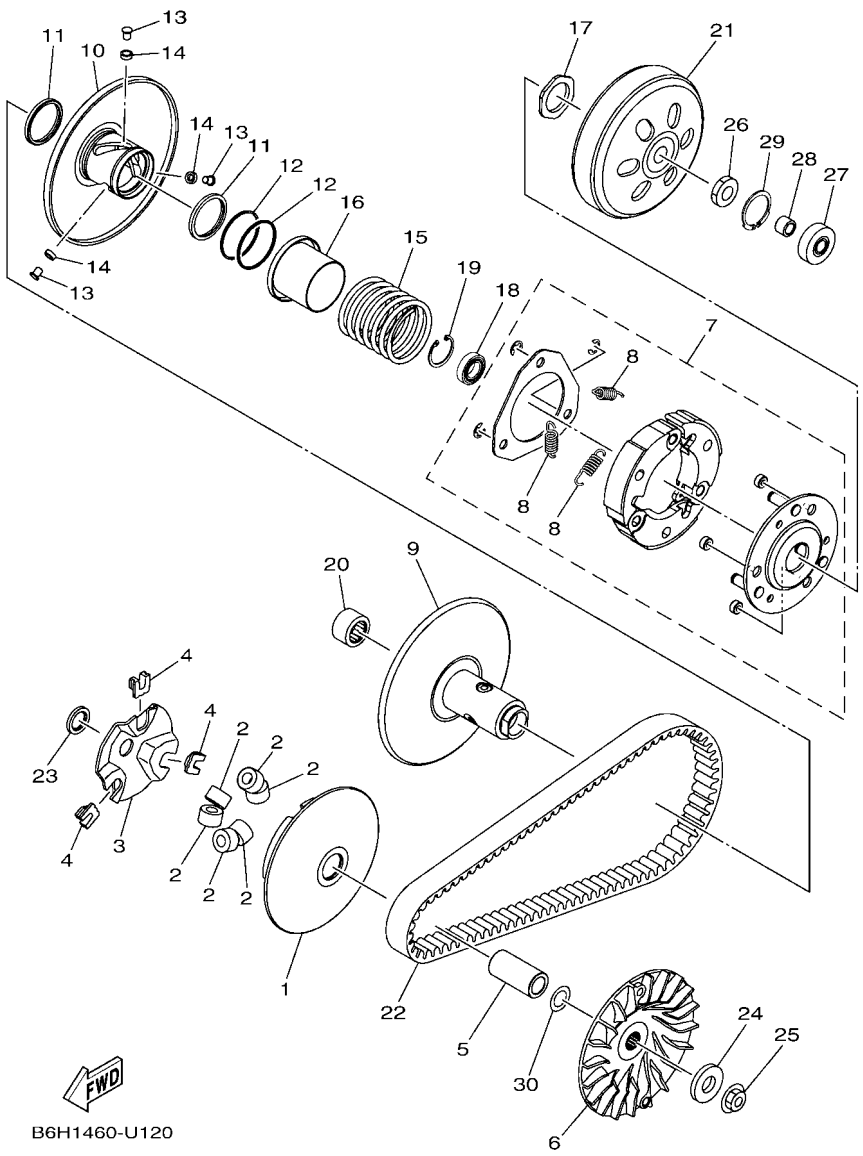

FIG. 12 EMBRAGUE — CLUTCH

REF. Nº	CODIGO Nº PART NO.	DESCRIPCION DESCRIPTION	BBE1					OBSERVACIONES REMARKS
1	B65–E7620–00	ROLDANA PRIMARIA MOVIL PRIMARY SLIDING SHEAVE COMP.	1					
2	B65–E7632–00	CONTRAPESO WEIGHT	6					
3	2DP–E7623–00	LEVA CAM	1					
4	44D–E7653–00	CORREDERA SLIDER	3					
5	B6H–E7674–00	COLLAR COLLAR, GUIDE	1					
6	2DP–E7611–00	PISCO FIXADOR DE POREA SHEAVE, PRIMARY FIXED	1					
7	B6H–E6620–00	PORTADOR DE EMBRAGUE COMPLETO CLUTCH CARRIER ASSY	1					
8	B65–E6626–00	.RESORTE CONTRAPESO EMBRAGUE 1 .SPRING, CLUTCH WEIGHT 1	3					
9	B6H–E7660–00	ROLDANA SECUNDARIA FIJA COMPL. SECONDARY FIXED SHEAVE COMP.	1					
10	B6H–E7670–00	ROLDANA SECUNDARIA CORREDIZA SECONDARY SLIDING SHEAVE	1					
11	2DP–E7465–00	SELLO SEAL	2					
12	2DP–E7465–10	SELLO SEAL	2					
13	B74–E7664–00	PASADOR DE GUIA PIN, GUIDE	3					
14	2DP–E7674–10	COLLAR COLLAR, GUIDE	3					
15	B65–E7683–00	RESORTE SECUNDARIO SPRING, SECONDARY	1					
16	2DP–E7684–00	ASIENTO DE RESORTE SECUNDARIO SEAT, SECONDARY SPRING	1					
17	2DP–E7668–00	TUERCA NUT	1					
18	B6H–E7678–00	COJINETE BEARING	1					
19	2DP–E5744–00	SEGURO CIRCLIP	1					
20	2DP–E7678–10	COJINETE BEARING	1					
21	B65–E6611–00	CAJA DE EMBRAGUE COMPLETO CLUTCH HOUSING COMP.	1					
22	B65–E7641–00	CORREA EN V V-BELT	1					
23	90201–16819	ARANDELA PLANA WASHER, PLATE	1					
24	90201–15849	ARANDELA PLANA WASHER, PLATE	1					
25	90179–12004	TUERCA NUT	1					
26	90170–12802	TUERCA NUT	1					
27	933A6–202Y0	COJINETE BEARING	1					

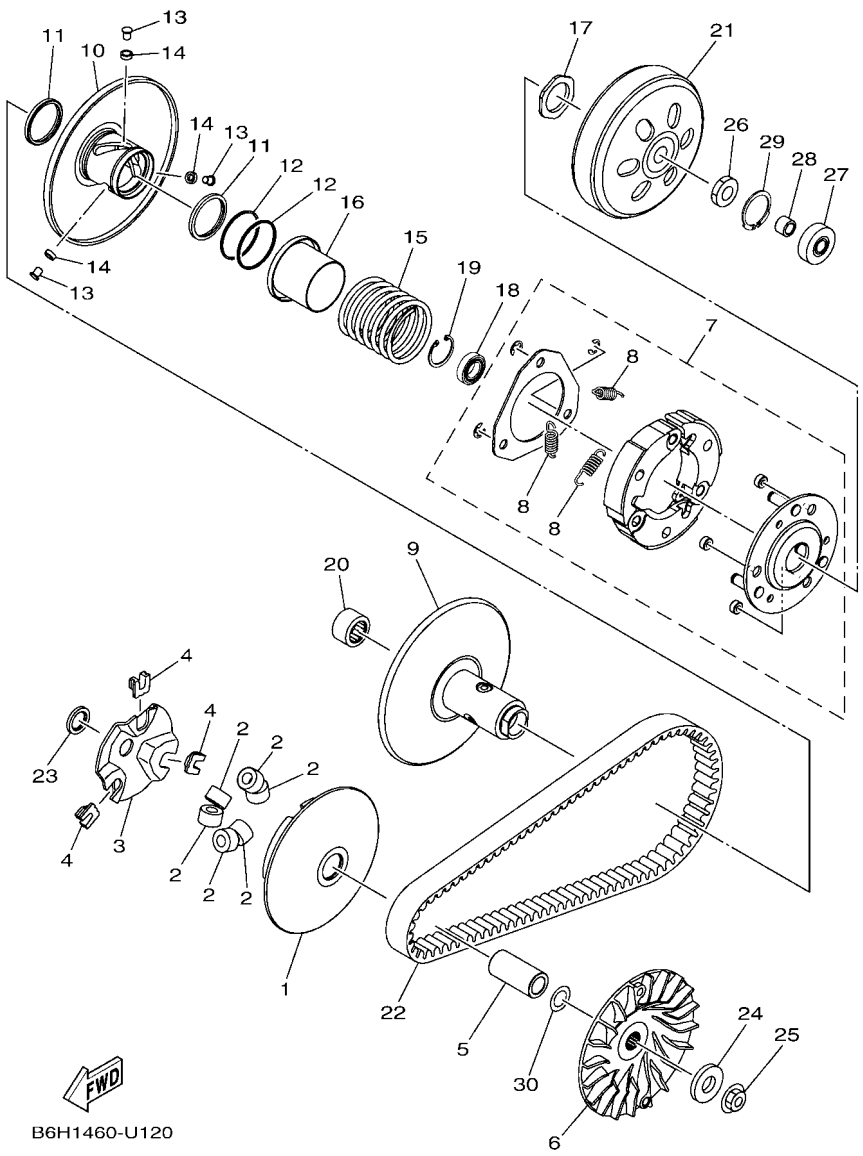

FIG. 12 EMBRAGUE — CLUTCH

REF. Nº	CODIGO Nº PART NO.	DESCRIPCION DESCRIPTION	BBE1					OBSERVACIONES REMARKS
28	90380–10800	CASQUILLO SOLIDO BUSH, SOLID	1					
29	99009–35700	PRESILLA REDONDA CIRCLIP	1					
30	90201–15847	ARANDELA PLANA WASHER, PLATE	1					

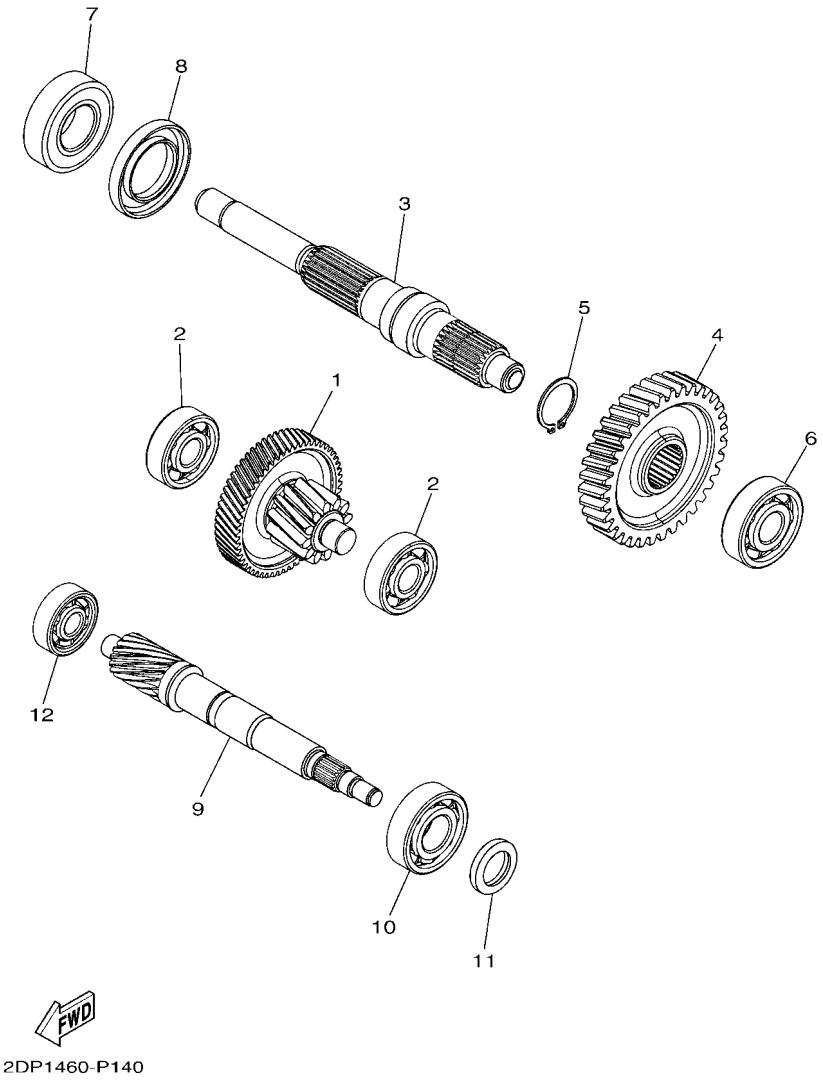

FIG. 13 TRANSMISION — TRANSMISSION

REF. Nº	CODIGO Nº PART NO.	DESCRIPCION DESCRIPTION	BBE1					OBSERVACIONES REMARKS
1	2DP–E7410–01	EJE PRINCIPAL COMPLETO 12T/56T MAIN AXLE COMP. (12T/56T)	1					UR EITHER CAN USE UR EITHER CAN USE
	2DP–E7410–10	EJE PRINCIPAL COMPLETO 12T/56T MAIN AXLE COMP. (12T/56T)	1					UR EITHER CAN USE UR EITHER CAN USE
	2DP–E7410–20	EJE PRINCIPAL COMPLETO 12T/56T MAIN AXLE COMP. (12T/56T)	1					UR EITHER CAN USE UR EITHER CAN USE
	2DP–E7410–30	EJE PRINCIPAL COMPLETO 12T/56T MAIN AXLE COMP. (12T/56T)	1					UR EITHER CAN USE UR EITHER CAN USE
2	93306–302YU	COJINETE BEARING	2					
3	B6H–E7421–00	EJE SECUNDARIO AXLE, DRIVE	1					
4	2DP–E7211–00	ENGRANAJE RUEDA DE 1RA (35T) GEAR, 1ST WHEEL (35T)	1					UR EITHER CAN USE UR EITHER CAN USE
	2DP–E7211–10	ENGRANAJE RUEDA DE 1RA (35T) GEAR, 1ST WHEEL (35T)	1					UR EITHER CAN USE UR EITHER CAN USE
5	99009–25400	PRESILLA REDONDA CIRCLIP	1					
6	93306–303YW	COJINETE BEARING	1					
7	93306–255YA	COJINETE BEARING	1					
8	93102–32807	SELLO ACEITE OIL SEAL	1					
9	B65–E6111–00	ENGRANAJE TRACC.PRIMARIA GEAR, PRIMARY DRIVE (16T)	1					UR EITHER CAN USE UR EITHER CAN USE
	B65–E6111–10	ENGRANAJE TRACC.PRIMARIA GEAR, PRIMARY DRIVE (16T)	1					UR EITHER CAN USE UR EITHER CAN USE
10	93306–254Y5	COJINETE BEARING	1					
11	93102–20815	SELLO ACEITE OIL SEAL	1					
12	93306–351Y8	COJINETE BEARING	1					

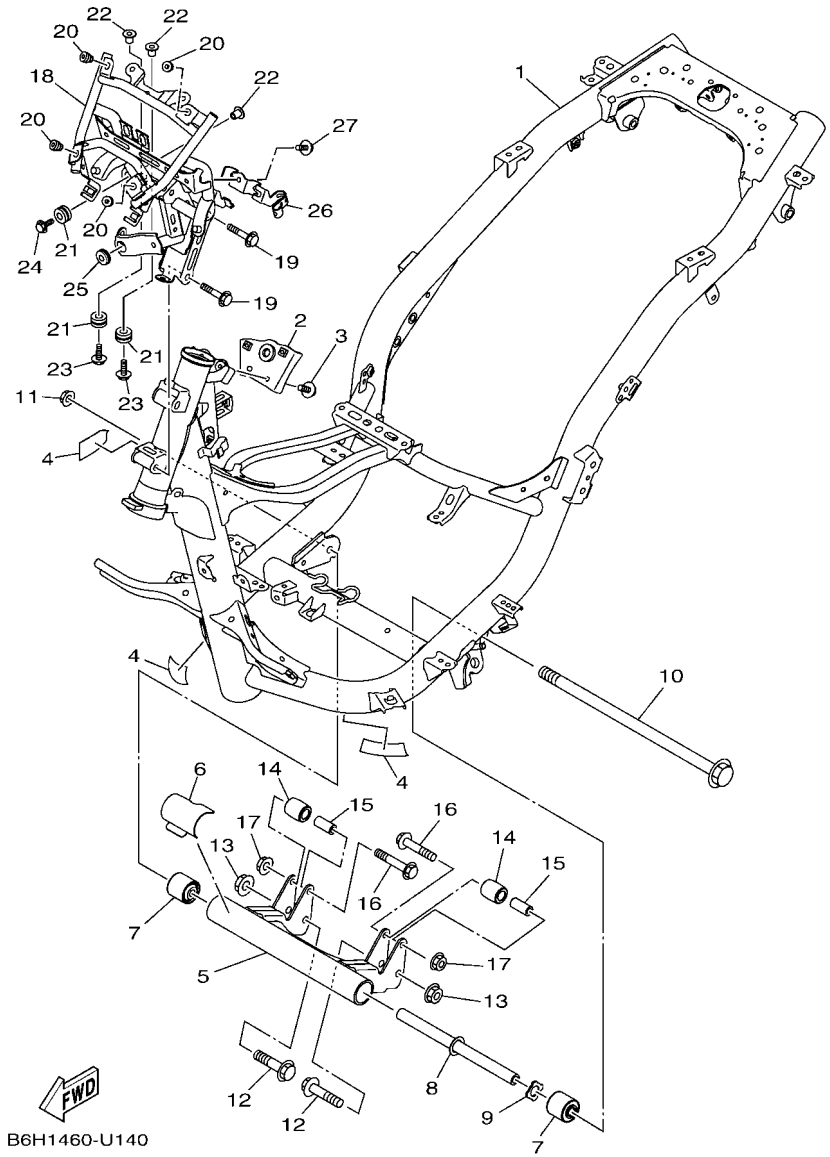

FIG. 14 CUADRO — FRAME

REF. Nº	CODIGO Nº PART NO.	DESCRIPCION DESCRIPTION	BBE1					OBSERVACIONES REMARKS
1	BBE–F1110–00	ARMAZON COMPLETO FRAME COMP.	1					
2	B6H–H251P–00	SOPORTE, INTERRUPTOR BRACKET, MAIN SWITCH	1					
3	90109–06318	PERNO BOLT	2					
4	5D9–F414G–00	SELLO SEAL	3					
5	B6H–F1410–00	SOPORTE DE MOTOR COMPLETO ENGINE BRACKET COMP.	1					
6	B65–F117G–00	PROTECTOR PROTECTOR	1					
7	90388–10818	AMORTIGUADOR DAMPER	2					
8	90387–10857	ESPACIADOR COLLAR	1					
9	B65–F113B–00	AMORTIGUADOR DAMPER	1					
10	B65–F2141–00	EJE DEL BARCULANTE SHAFT, PIVOT	1					
11	95602–10200	TUERCA DE AUTO-CIERRE NUT, S/L FLANGE	1					
12	90105–10283	TORNILLO BOLT, FLANGE	2					
13	95602–10200	TUERCA DE AUTO-CIERRE NUT, S/L FLANGE	2					
14	44D–F7114–00	TOPE DE PUNTAL PRINCIPAL STOPPER, MAIN STAND	2					
15	90387–08821	ESPACIADOR COLLAR	2					
16	90105–088E3	TORNILLO BOLT, FLANGE	2					
17	95602–08200	TUERCA DE AUTO-CIERRE NUT, U FLANGE	2					
18	B6H–F8356–00	SOPORTE 1 STAY 1	1					
19	95D32–08050	CERROJO, REBORDE HUECO PROFUND BOLT, FLANGE DEEP RECESS	2					
20	90179–05003	TUERCA NUT	4					
21	90480–14229	TAPON GROMMET	3					
22	90387–068N8	ESPACIADOR COLLAR	3					
23	95D32–06020	CERROJO, REBORDE HUECO PROFUND BOLT, FLANGE DEEP RECESS	2					
24	90105–068C5	TORNILLO BOLT, FLANGE	1					
25	90480–17802	TAPON GROMMET	1					
26	B6H–F588F–00	SOPORTE DE MANGUERA FRENO 5 HOLDER, BRAKE HOSE 5	1					
27	95D32–06012	CERROJO, REBORDE HUECO PROFUND BOLT, FLANGE DEEP RECESS	1					

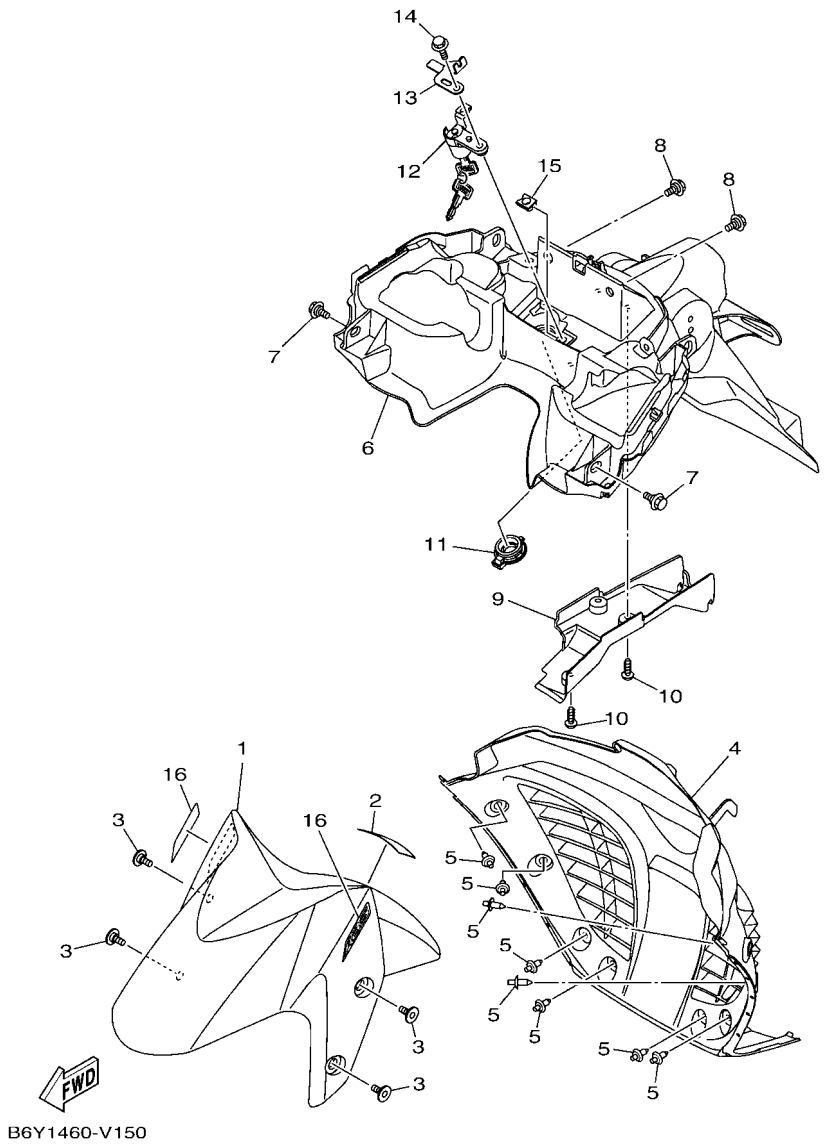

FIG. 15 GUARDABARRO — FENDER

REF. Nº	CODIGO Nº PART NO.	DESCRIPCION DESCRIPTION	BBE1					OBSERVACIONES REMARKS
1	BK3–F1511–00–P5	GUARDABARRO DELANTERO FENDER, FRONT	1					UR PARA BWM1 UR FOR BWM1
	BK3–F1511–00–P4	GUARDABARRO DELANTERO FENDER, FRONT	1					UR PARA MBL2 UR FOR MBL2
	BK3–F1511–00–P6	GUARDABARRO DELANTERO FENDER, FRONT	1					UR PARA DPBML UR FOR DPBML
2	5D9–F414G–00	SELLO SEAL	1					
3	90109–068A4	PERNO BOLT	4					
4	B6H–F1552–00	GUARDABARRO FENDER, INNER	1					
5	90269–06816	REMACHE RIVET	8					
6	B6H–F1611–00	GUARDABARRO TRASERO FENDER, REAR	1					
7	90109–068B2	PERNO BOLT	2					
8	90109–068C7	PERNO BOLT	2					
9	B6H–F162R–00	GUARDABAARRO 2 FENDER 2	1					
10	97702–50016	TORNILLO ROSCA HEMBRA SCREW,TAPPING	3					
11	B5D–F465B–00	TAPA, ROTOR CAP, ROTOR	1					
12	B65–F465E–00	ROTOR COMPLETO ROTOR COMP.	1					
13	B65–F117K–00	SOPORTE DE CERRADURA STAY, LOCK	1					
14	95022–06020	PERNO, DE BRIDA BOLT, FLANGE	1					
15	90183–06818	TUERCA DE RESORTE NUT, SPRING	1					
16	BBE–F843G–00	CALCOMANIA 3 GRAPHIC, 3	2					

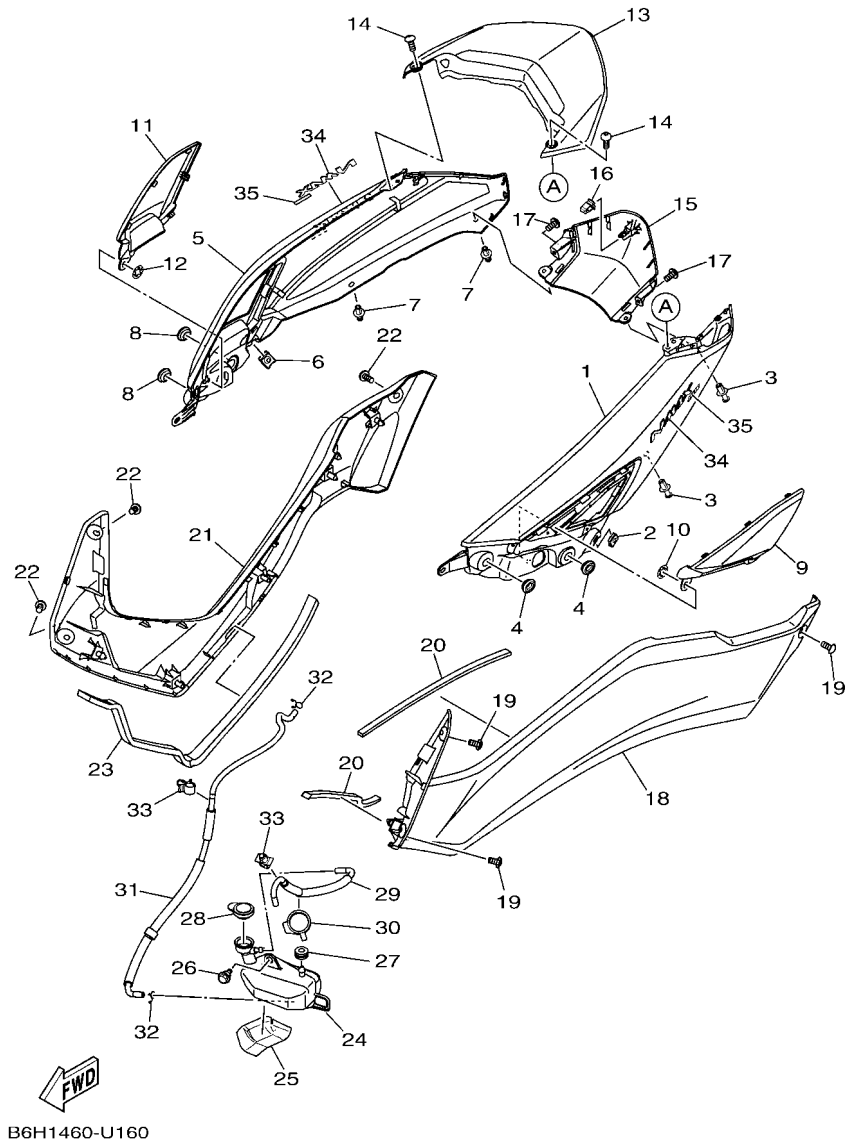

FIG. 16 CUBIERTA LATERAL — SIDE COVER

REF. Nº	CODIGO Nº PART NO.	DESCRIPCION DESCRIPTION	BBE1					OBSERVACIONES REMARKS
1	BBE–F1711–00–P0	CUBIERTA LATERAL 1 COVER, SIDE 1	1					UR PARA BWM1 UR FOR BWM1
	BBE–F1711–00–P1	CUBIERTA LATERAL 1 COVER, SIDE 1	1					UR PARA MBL2 UR FOR MBL2
	BBE–F1711–00–P2	CUBIERTA LATERAL 1 COVER, SIDE 1	1					UR PARA DPBML UR FOR DPBML
2	90183–05807	TUERCA DE RESORTE NUT, SPRING	1					
3	90269–06816	REMACHE RIVET	2					
4	90480–01559	TAPON GROMMET	2					
5	BBE–F1721–00–P0	CUBIERTA LATERAL 2 COVER, SIDE 2	1					UR PARA BWM1 UR FOR BWM1
	BBE–F1721–00–P1	CUBIERTA LATERAL 2 COVER, SIDE 2	1					UR PARA MBL2 UR FOR MBL2
	BBE–F1721–00–P2	CUBIERTA LATERAL 2 COVER, SIDE 2	1					UR PARA DPBML UR FOR DPBML
6	90183–05807	TUERCA DE RESORTE NUT, SPRING	1					
7	90269–06816	REMACHE RIVET	2					
8	90480–01559	TAPON GROMMET	2					
9	B6H–F171E–00	CUBIERTA LATERAL 5 COVER, SIDE 5	1					
10	90183–06815	TUERCA DE RESORTE NUT, SPRING	1					
11	B6H–F171X–00	CUBIERTA LATERAL 6 COVER, SIDE 6	1					
12	90183–06815	TUERCA DE RESORTE NUT, SPRING	1					
13	B6H–H4716–00	CUBIERTA DE FARO TRASERO COVER, TAILLIGHT	1					
14	97707–50016	TORNILLO SCREW, TRUSS HEAD TAPPING	2					
15	BBE–F1651–00–P0	TAPA DE GUARDABARRO TRAS. COVER, REAR FENDER	1					UR PARA BWM1 UR FOR BWM1
	BBE–F1651–00–P1	TAPA DE GUARDABARRO TRAS. COVER, REAR FENDER	1					UR PARA MBL2 UR FOR MBL2
	BBE–F1651–00–P2	TAPA DE GUARDABARRO TRAS. COVER, REAR FENDER	1					UR PARA DPBML UR FOR DPBML
16	90464–07018	BRIDA CLAMP	1					
17	97702–50016	TORNILLO ROSCA HEMBRA SCREW,TAPPING	2					
18	BBE–F1731–00–P0	TAPA LATERAL 3 COVER, SIDE 3	1					SMX SMX
19	90160–05810	TORNILLO REDONDO ROSCA HEMBRA SCREW, ROUND TAPPING	3					
20	90520–10854	EQUILIBRIO, CUBIERTA DAMPER, PLATE	2					
21	BBE–F1741–00–P0	TAPA LATERAL 4 COVER, SIDE 4	1					SMX SMX

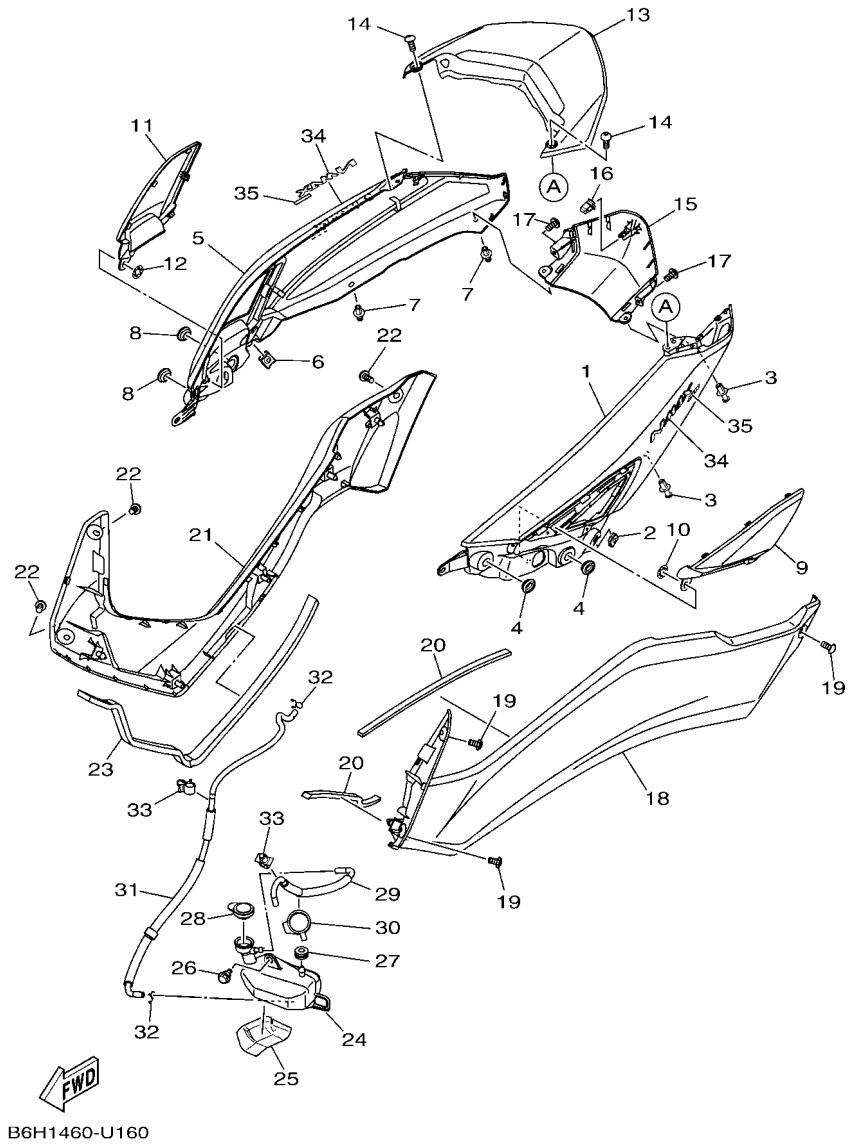

FIG. 16 CUBIERTA LATERAL — SIDE COVER

REF. Nº	CODIGO Nº PART NO.	DESCRIPCION DESCRIPTION	BBE1					OBSERVACIONES REMARKS
22	90160–05810	TORNILLO REDONDO ROSCA HEMBRA SCREW, ROUND TAPPING	3					
23	90520–15817	EQUILIBRIO, CUBIERTA DAMPER, PLATE	1					
24	B65–F1871–00	TANQUE DE RECUPERACION TANK, RECOVERY	1					
25	B6H–F1746–00	AMORTIGUADOR DAMPER	1					
26	90109–068B2	PERNO BOLT	1					
27	90480–14808	TAPON GROMMET	1					
28	1S7–F1875–01	TAPA CAP	1					
29	B6H–F1816–00	TUBO 1 PIPE 1	1					
30	90464–30001	BRIDA CLAMP	1					
31	B6H–F1817–00	TUBO 2 PIPE 2	1					
32	90467–08003	PRESILLA CLIP	2					
33	90464–07805	BRIDA CLAMP	2					
34	BK3–F173B–00	EMBLEMA 3D EMBLEM 3D	2					
35	BBE–F173E–00	GRAFICO, 1 GRAPHIC 1	2					UR PARA BWM1 UR FOR BWM1
	BK3–F173E–00	GRAFICO, 1 GRAPHIC 1	2					UR PARA MBL2 UR FOR MBL2
	BK3–F173E–20	GRAFICO, 1 GRAPHIC 1	2					UR PARA DPBML UR FOR DPBML

FIG. 17 BRAZO TRASERO & SUSPENSION — REAR ARM & SUSPENSION

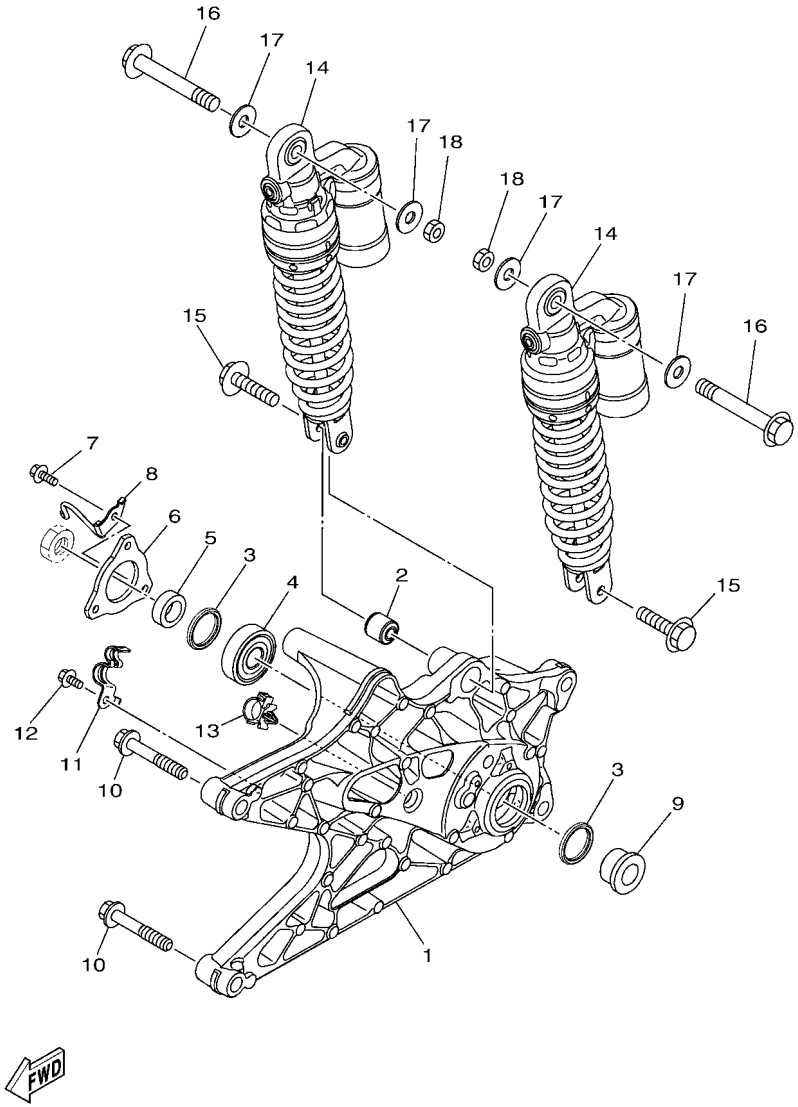

REF. Nº	CODIGO Nº PART NO.	DESCRIPCION DESCRIPTION	BBE1					OBSERVACIONES REMARKS
1	B6H–F2171–00	BRAZO POSTERIOR 1 ARM, REAR 1	1					
2	90388–08803	AMORTIGUADOR DAMPER	1					
3	93106–28801	SELLO ACEITE OIL SEAL	2					
4	93306–303YX	COJINETE BEARING	1					
5	90387–17807	ESPACIADOR COLLAR	1					
6	2DP–F2117–00	TAPA CAP	1					
7	95D37–06016	CERROJO, REBORDE HUECO PROFUND BOLT, FLANGE DEEP RECESS	3					
8	B6H–F588G–10	SOPORTE DE MANGUERA FRENO 6 HOLDER, BRAKE HOSE 6	1					
9	90387–17808	ESPACIADOR COLLAR	1					
10	95D32–10060	CERROJO, REBORDE HUECO PROFUND BOLT, FLANGE DEEP RECESS	2					
11	B6H–F5886–00	SOPORTE DE MANGUERA FRENO HOLDER, BRAKE HOSE	1					
12	95D32–06012	CERROJO, REBORDE HUECO PROFUND BOLT, FLANGE DEEP RECESS	1					
13	90464–16006	BRIDA CLAMP	1					
14	BBB–F2210–00	AMORTIGUADOR TRASERO COMPLETO SHOCK ABSORBER ASSY, REAR	2					
15	90105–088E8	TORNILLO BOLT, FLANGE	2					
16	90105–108C1	TORNILLO BOLT, FLANGE	2					
17	90201–10853	ARANDELA PLANA WASHER, PLATE	4					
18	95302–10600	TUERCA NUT, HEXAGON	2					

FIG. 18 DIRECCION — STEERING

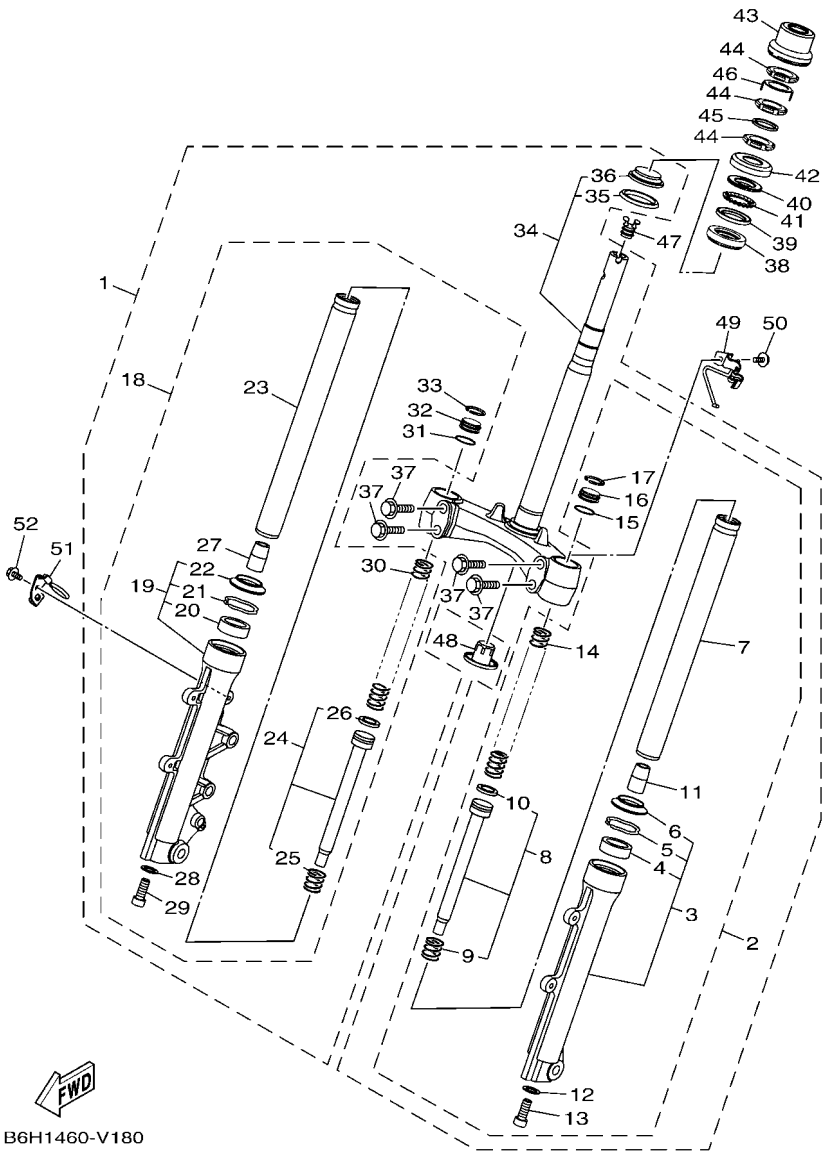

REF. Nº	CODIGO Nº PART NO.	DESCRIPCION DESCRIPTION	BBE1					OBSERVACIONES REMARKS
1	B6H–F3100–00	HORQUILLA DELANTERA COMPLETA FRONT FORK ASSY	1					
2	B6H–F3102–00	.HORQUILLA DELANTERA COMPL.(MI) .FRONT FORK ASSY (L.H)	1					
3	2DP–F3126–00	..TUBO EXTERIOR (IZQUIERDO) ..TUBE, OUTER (L.H)	1					
4	3HB–F3145–00	...RETEN DE ACEITE ...OIL SEAL	1					
5	3V3–F3156–00	...ANILLO DE ENGANCHE ...RING, SNAP	1					
6	3HB–F3144–00	...GUARDAPOLVO ...SEAL, DUST	1					
7	2DP–F3110–00	..TUBO INTERIOR COMPLETO 1 ..INNER TUBE COMP.1	1					
8	2DP–F3170–00	..CILINDRO COMPL DE HORQ DELANT ..CYLINDER COMP., FRONT FORK	1					
9	2K5–23152–00	...RESORTE DE SUBENSAMBLE ...SPRING, SUB	1					
10	2DP–F3157–00	...ANILLO DEL PISTON ...RING, PISTON	1					
11	2DP–F3173–00	..VASTAGO AHUSADO ..SPINDLE, TAPER	1					
12	2BU–F3158–00	..EMPAQUE ..GASKET	1					
13	278–F3181–50	..TORNILLO CABEZAHEXAGONAL ..BOLT, HEXAGON SOCKET HEAD	1					
14	B6H–F3141–00	..RESORTE HORQUILLA DELANT. ..SPRING, FRONT FORK	1					
15	3Y6–23114–00	..EMPAQUE ..GASKET	1					
16	2DP–F3111–00	..PERNO DE TAPA ..BOLT, CAP	1					
17	2DP–F3153–00	..ANILLO DE ENGANCHE ..RING, SNAP	1					
18	B6H–F3103–00	.HORQUILLA DELANTERA COMPL.(MD) .FRONT FORK ASSY (R.H)	1					
19	2DP–F3136–00	..TUBO EXTERIOR 2 ..TUBE, OUTER	1					
20	3HB–F3145–00	...RETEN DE ACEITE ...OIL SEAL	1					
21	3V3–F3156–00	...ANILLO DE ENGANCHE ...RING, SNAP	1					
22	3HB–F3144–00	...GUARDAPOLVO ...SEAL, DUST	1					
23	2DP–F3110–00	..TUBO INTERIOR COMPLETO 1 ..INNER TUBE COMP.1	1					
24	2DP–F3170–00	..CILINDRO COMPL DE HORQ DELANT ..CYLINDER COMP., FRONT FORK	1					
25	2K5–23152–00	...RESORTE DE SUBENSAMBLE ...SPRING, SUB	1					
26	2DP–F3157–00	...ANILLO DEL PISTON ...RING, PISTON	1					
27	2DP–F3173–00	..VASTAGO AHUSADO ..SPINDLE, TAPER	1					

FIG. 18 DIRECCION — STEERING

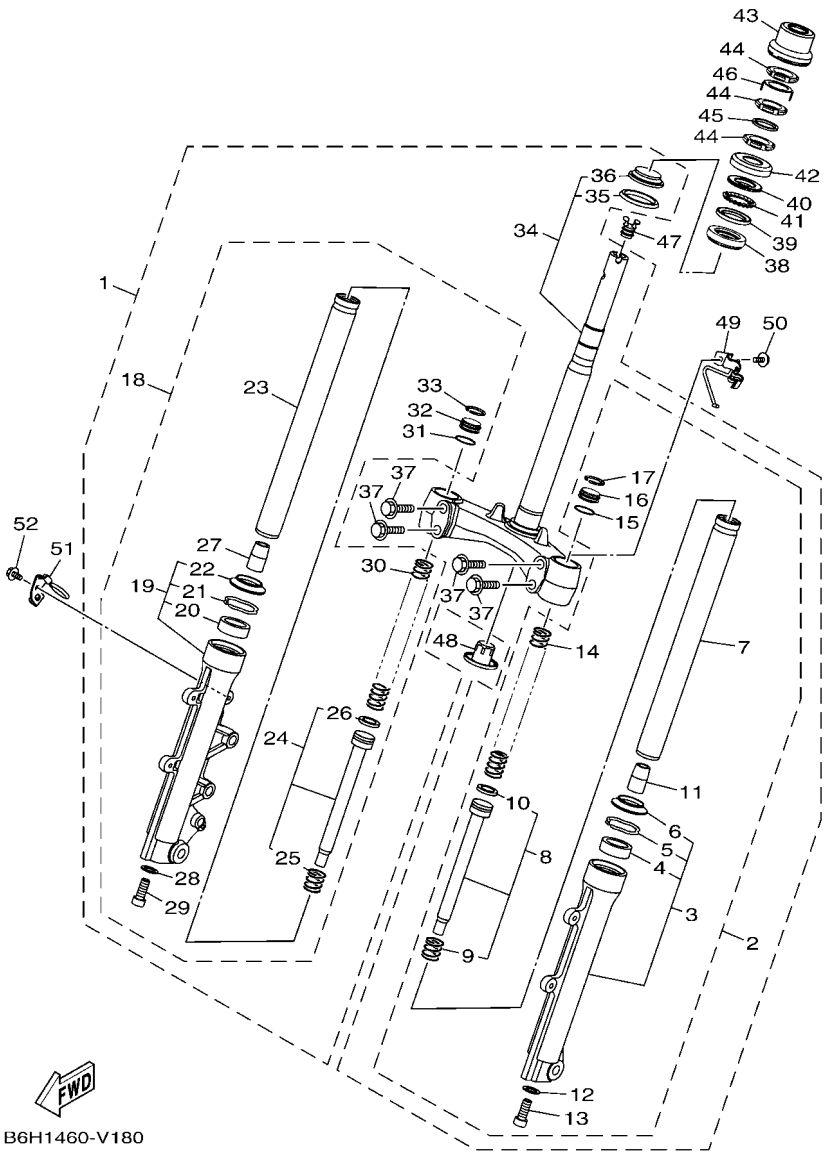

REF. Nº	CODIGO Nº PART NO.	DESCRIPCION DESCRIPTION	BBE1					OBSERVACIONES REMARKS
28	2BU–F3158–00	..EMPAQUE ..GASKET	1					
29	278–F3181–50	..TORNILLO CABEZAHEXAGONAL ..BOLT, HEXAGON SOCKET HEAD	1					
30	B6H–F3141–00	..RESORTE HORQUILLA DELANT. ..SPRING, FRONT FORK	1					
31	3Y6–23114–00	..EMPAQUE ..GASKET	1					
32	2DP–F3111–00	..PERNO DE TAPA ..BOLT, CAP	1					
33	2DP–F3153–00	..ANILLO DE ENGANCHE ..RING, SNAP	1					
34	B6H–F2403–00	.PLATINA INFERIOR COMPLETA .UNDER BRACKET COMP	1					
35	B63–F3462–00	..SELLO PARA POLVO ..SEAL, DUST	1					
36	2TD–F3875–00	..COJINETE ..BEARING, STEERING LOWER	1					
37	5YW–F3346–10	.PERNO 1 .BOLT 1	4					
38	2TD–F3873–00	COJINETE SUP.DIRECCION BEARING, STEERING UPPER	1					
39	4RT–F3412–10	PISTA DE BOLAS 2 RACE, BALL 2	1					
40	4RT–F3411–10	PISTA DE BOLAS 1 RACE, BALL 1	1					
41	1P6–F341E–10	RETEN DE COJINETE RETAINER, BALL BEARING	1					
42	3AY–F3416–00	CUBIERTA DE BASE DE BOLA 2 COVER, BALL RACE 2	1					
43	B65–F3415–00	CUBIERTA DE PISTA DE BOLAS 1 COVER, BALL RACE 1	1					
44	90179–25810	TUERCA NUT	3					
45	90202–26142	ARANDELA DE PLANA WASHER, PLATE	1					
46	1SK–F3418–00	ARANDELA ESPECIAL WASHER, SPECIAL	1					
47	B6H–F312G–00	TAPON PLUG, HOLE	1					
48	B65–F3123–00	CUBIERTA INFERIOR COVER, UNDER 1	1					
49	B6H–F5875–00	SOPORTE DE MANGUERA FRENO 1 HOLDER, BRAKE HOSE 1	1					
50	95D02–06012	CERROJO, REBORDE HUECO PROFUND BOLT, FLANGE DEEP RECESS	1					
51	B6H–F5876–00	SOPORTE DE MANGUERA FRENO 2 HOLDER, BRAKE HOSE 2	1					
52	95D02–06012	CERROJO, REBORDE HUECO PROFUND BOLT, FLANGE DEEP RECESS	1					

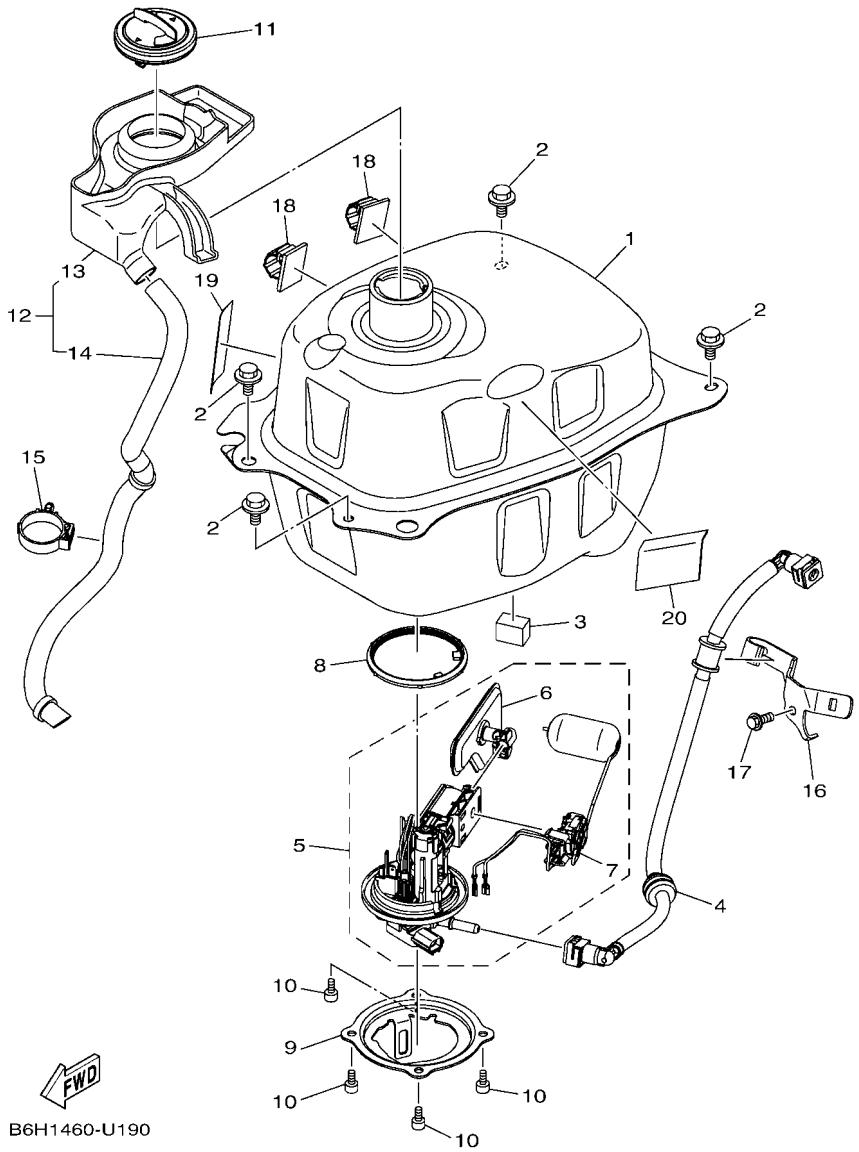

FIG. 19 DEPOSITO DE COMBUSTIBLE — FUEL TANK

REF. Nº	CODIGO Nº PART NO.	DESCRIPCION DESCRIPTION	BBE1					OBSERVACIONES REMARKS
1	BBE–F4110–00	DEPOSITO DE COMBUSTIBLE COMP. FUEL TANK COMP.	1					
2	90119–068B7	TORNILLO CON ARANDELA BOLT, WITH WASHER	4					
3	90520–15803	EQUILIBRIO, CUBIERTA DAMPER, PLATE	1					
4	B6H–E3971–00	ANILLO DE ESPACIADOR PIPE, FUEL 1	1					
5	B6H–E3907–00	BOMBA DE COMBUSTIBLE COMPLETA FUEL PUMP COMP.	1					
6	54P–E3915–00	.FILTRO .FILTER, FUEL SUCTION	1					
7	BK6–H5752–00	.UNIDAD TRANSM. MED. COMBUST. .SENDER UNIT ASSY, FUEL METER	1					
8	54P–F414G–10	SELLO SEAL	1					
9	B6H–F4491–00	SOPORTE BOMBA COMBUSTIBLE BRACKET, FUEL PUMP	1					
10	91312–05010	TORNILLO ALLEN BOLT, HEXAGON SOCKET HEAD	4					
11	B6H–F4610–01	TAPA COMPLETA CAP ASSY	1					
12	B6H–F414A–01	CUBIERTA DE LLENADOR COVER, FILLER	1					
13	B6H–F4217–00	.CUBIERTA .COVER	1					
14	B6H–F4318–01	.TUBO DE REBOSAMIENTO .PIPE, OVERFLOW	1					
15	90464–30001	BRIDA CLAMP	1					
16	B6H–F419A–00	SOSTEN HOLDER	1					
17	95E37–06012	CERROJO, REBORDE HUECO PROFUND BOLT, FLANGE DEEP RECESS	1					
18	90464–14002	BRIDA CLAMP	2					
19	5D9–F414G–00	SELLO SEAL	1					
20	5TP–F139X–00	AMORTIGUADOR DAMPER	1					

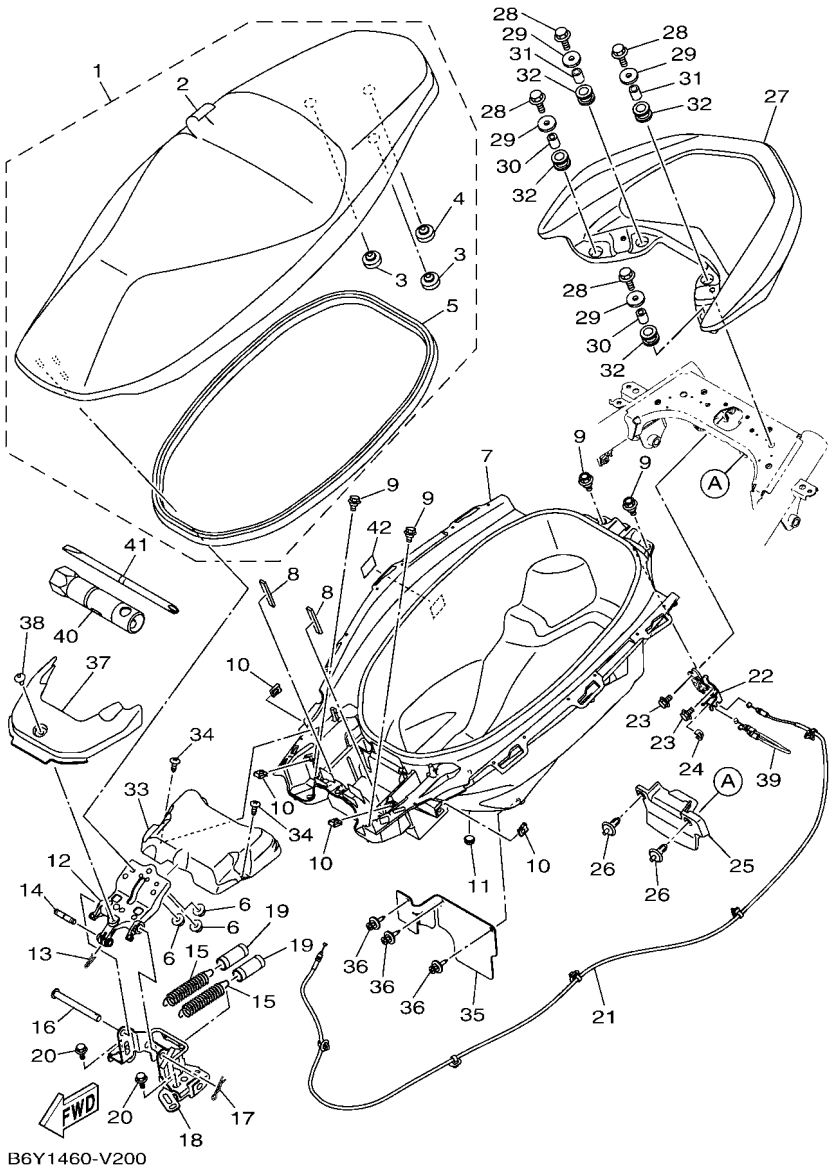

FIG. 20 ASIENTO — SEAT

REF. Nº	CODIGO Nº PART NO.	DESCRIPCION DESCRIPTION	BBE1					OBSERVACIONES REMARKS
1	BBE–F4730–00	SILLIN DOBLE COMPLETO DOUBLE SEAT ASSY	1					
2	BBE–F470F–00	.FUNDADE SILLIN .SEAT COVER COMP.	1					
3	5BP–F4741–00	.COJIN DE ASIENTO .PAD, SEAT	2					
4	45D–F4741–00	.COJIN DE ASIENTO .PAD, SEAT	1					
5	B6H–F475M–00	.SELLO .SEAL	1					
6	95702–06500	TUERCA DE BRIDA NUT, FLANGE	3					
7	B6Y–F473R–00	CAJA 1 BOX 1	1					
8	90520–04806	EQUILIBRIO, CUBIERTA DAMPER, PLATE	2					
9	90109–068B2	PERNO BOLT	4					
10	90183–05807	TUERCA DE RESORTE NUT, SPRING	4					
11	4US–F6199–00	TAPON PLUG, BLIND	1					
12	B6H–F4769–00	BISAGRA DE ASIENTO HINGE, SEAT	1					
13	90468–08086	PRESILLA CLIP	1					
14	B6H–F4811–00	TAPON HOOK, STRING	1					
15	90506–23815	RESORTE DE TENSION SPRING, TENSION	2					
16	B74–F4727–00	PASADOR ACCESORIO DE ASIENTO PIN, SEAT FITTING	1					
17	90468–18121	PRESILLA CLIP	1					
18	B6H–F472A–00	BLOQUEO DE BATERIA SUPT. ,BATTERY	1					
19	B6H–F247C–00	TUBO 3 HOSE 3	2					
20	90119–06212	TORNILLO CON ARANDELA BOLT, WITH WASHER	2					
21	B6H–F478E–00	CABLE CABLE, SEAT LOCK	1					
22	B65–F4780–00	CERRADURA SILLIN COMPLETO SEAT LOCK ASSY	1					
23	95E32–06012	CERROJO, REBORDE HUECO PROFUND BOLT, FLANGE DEEP RECESS	2					
24	1S7–F4768–00	TOPE STOPPER	1					
25	B6H–F472T–00	CUBIERTA, ASIENTO DE CIERRE COVER, SEAT LOCK	1					
26	90269–06816	REMACHE RIVET	2					
27	BBE–F4773–00–P0	MANIJA DE ASIENTO HANDLE, SEAT	1					SM12 SM12

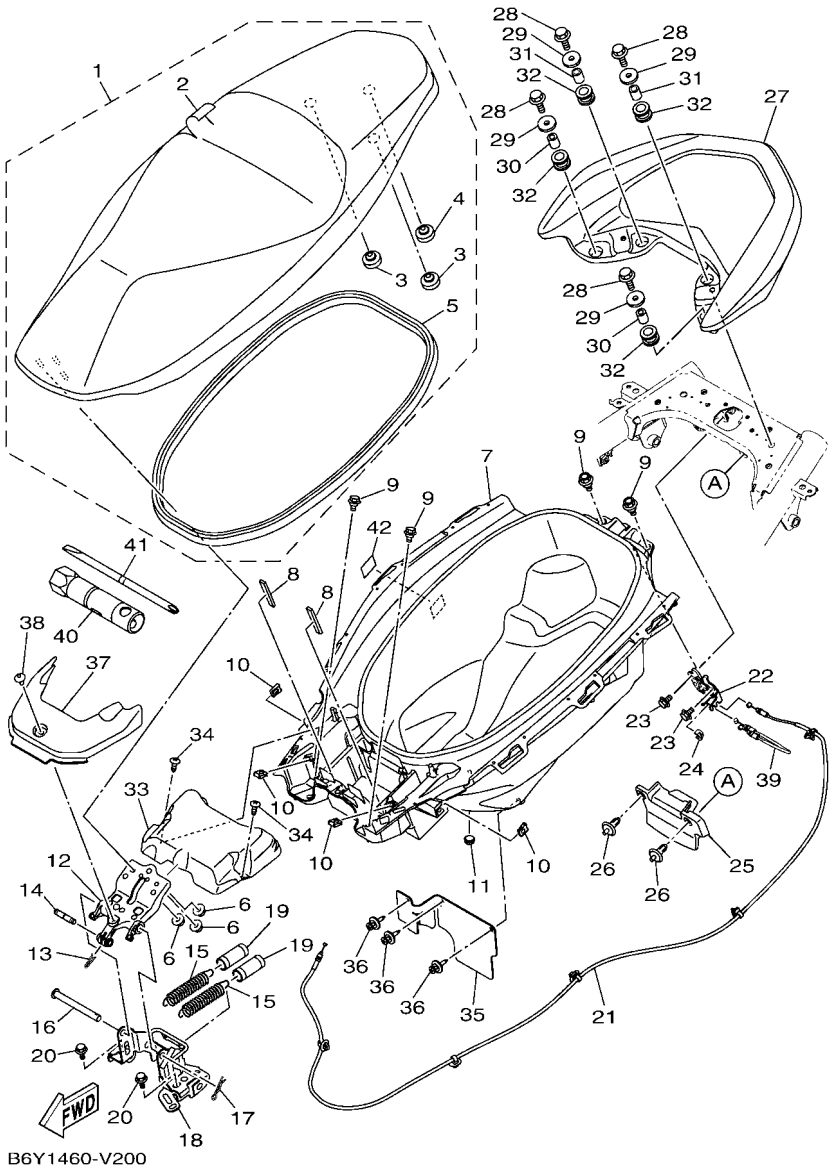

FIG. 20 ASIENTO — SEAT

REF. Nº	CODIGO Nº PART NO.	DESCRIPCION DESCRIPTION	BBE1					OBSERVACIONES REMARKS
28	95D32–08035	CERROJO, REBORDE HUECO PROFUND BOLT, FLANGE DEEP RECESS	4					
29	90201–08884	ARANDELA PLANA WASHER, PLATE	4					
30	90387–08847	ESPACIADOR COLLAR	2					
31	90387–10867	ESPACIADOR COLLAR	2					
32	90480–19802	TAPON GROMMET	4					
33	B6H–H2129–10	CUBIERTA DE BATERIA COVER, BATTERY	1					
34	97707–50012	TORNILLO SCREW, TRUSS HEAD TAPPING	2					
35	B6H–F1621–00	CHARNELA FLAP	1					
36	90269–06812	REMACHE RIVET	3					
37	B6H–F842N–00	CUBIERTA 2 COVER 2	1					
38	90111–05816	TORNILLO BOLT,HEX. SOCKET BUTTON	1					
39	B6H–F479D–00	CABLE, CERRADURA SILLIN 2 WIRE, SEAT LOCK 2	1					
40	2DP–F814F–00	CAJA BOX, SPARK PLUG	1					
41	3AY–F8152–00	CONDUCTOR DRIVER	1					
42	BK3–F1668–00	ETIQUETA DE FRANJA LABEL, TIRE	1					

FIG. 21 RUEDA DELANTERA — FRONT WHEEL

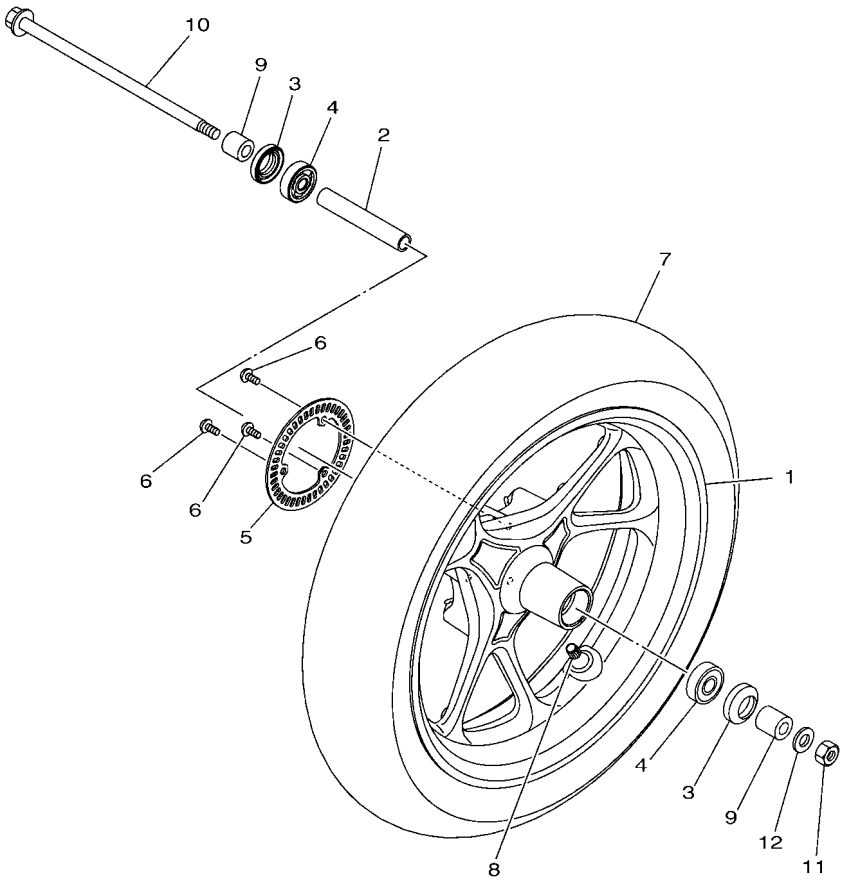

B6H1460-U210

REF. Nº	CODIGO Nº PART NO.	DESCRIPCION DESCRIPTION	BBE1					OBSERVACIONES REMARKS
1	B6H–F5168–00–33	RUEDA FUNDIDA DELANTERA CAST WHEEL, FRONT	1					YB YB
2	90387–10839	ESPACIADOR COLLAR	1					
3	93106–20816	SELLO ACEITE OIL SEAL	2					
4	93306–300YN	COJINETE BEARING	2					
5	2DP–F517G–00	ROTOR DE SENSOR ROTOR, SENSOR	1					
6	90149–05030	TORNILLO DE REGLAJE SCREW	3					
7	94111–13803	NEUMATICO (110/70-13M/C 48P) TIRE (110/70-13M/C 48P)	1					INOUE
8	93900–00824	VALVULA VALVE, RIM	1					
9	90387–10277	ESPACIADOR COLLAR	2					
10	2DP–F5181–00	EJE DE LA RUEDA AXLE, WHEEL	1					
11	90185–10012	TUERCA AUTOBLOCANTE NUT, SELF-LOCKING	1					
12	90201–10831	ARANDELA PLANA WASHER, PLATE	1					

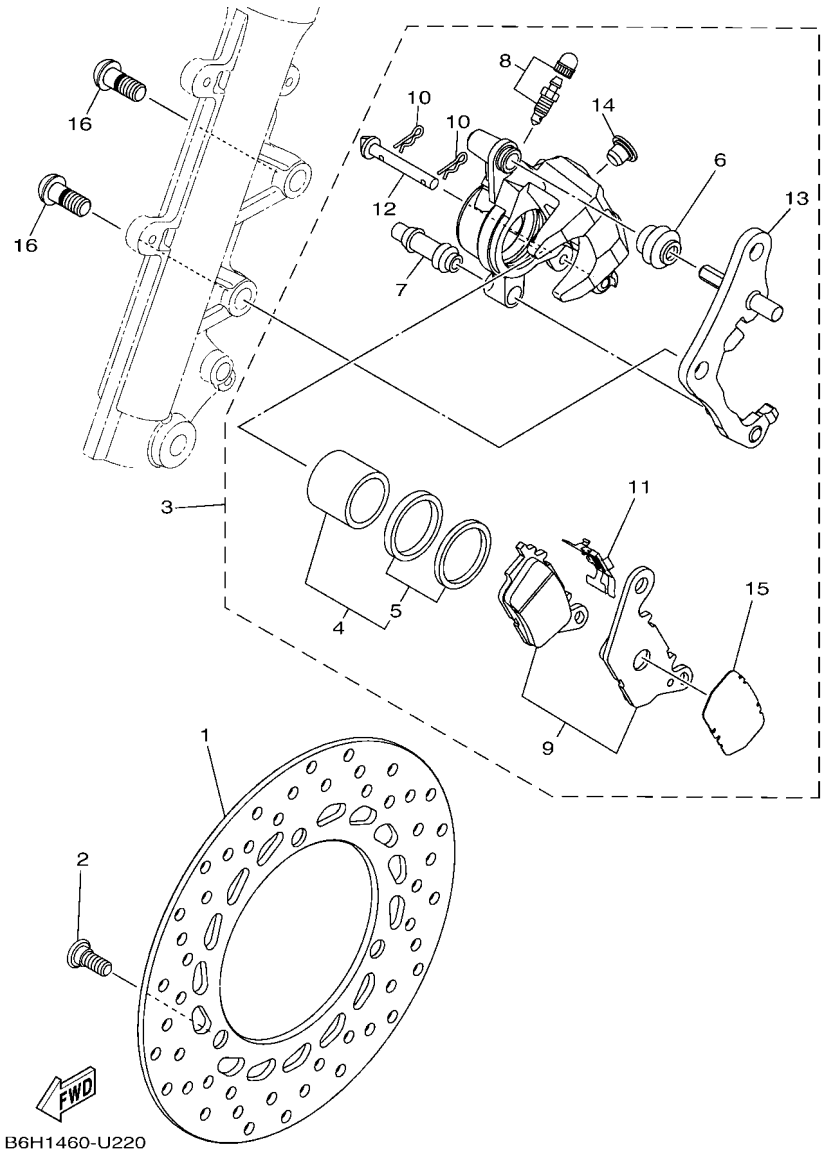

FIG. 22 CALIBRE FRENO DELANTERA — FRONT BRAKE CALIPER

REF. Nº	CODIGO Nº PART NO.	DESCRIPCION DESCRIPTION	BBE1					OBSERVACIONES REMARKS
1	2DP–F582U–00	DISCO DE FRENO (DERECHO) DISK, BRAKE (RIGHT)	1					
2	90109–08232	PERNO BOLT	3					
3	B6H–F580U–00	CALIBRE COMPLETO (DERECHO) CALIPER ASSY (RIGHT)	1					
4	2BM–F5802–00	.PISTON COMPLETO PINZA .PISTON ASSY, CALIPER	1					
5	5YP–F5803–50	..JUEGO DE RETENES DE PINZA ..CALIPER SEAL KIT	1					
6	2BM–F5917–00	.FUNDA DE CALIBRE .BOOT, CALIPER	1					
7	5YP–F5937–00	.FUNDA .BOOT 2	1					
8	4C9–W0048–00	.CJTO TORNILLO DE PURGA .BLEED SCREW KIT	1					
9	2DP–F5805–00	.JUEGO DE COJIN DE FRENO .BRAKE PAD KIT	1					
10	5YP–F5925–01	.PRESILLA .CLIP	2					
11	2BM–F5919–00	.SOPORTE DE PASTILLAS .SUPPORT, PAD	1					
12	5YP–F5924–00	.PASADOR .PIN, PAD	1					
13	2DP–F5920–00	.SOPORTE .SUPT. BRKT. ASSY.	1					
14	2R6–F5916–00	.TAPON .PLUG	1					
15	B8A–F5827–00	.CUNA DE CALIBRE .SHIM, CALIPER	1					
16	90149–10805	TORNILLO DE REGLAJE SCREW	2					

FIG. 23 RUEDA TRASERA — REAR WHEEL

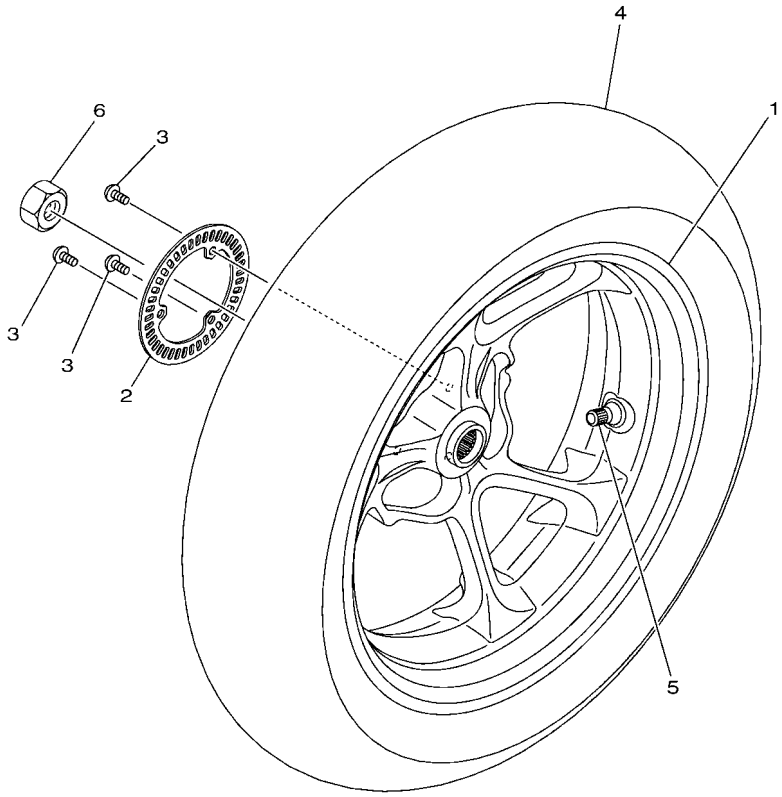

B6H1460-U230

REF. Nº	CODIGO Nº PART NO.	DESCRIPCION DESCRIPTION	BBE1					OBSERVACIONES REMARKS
1	B6H–F5338–00–33	RUEDA FUNDIDA TRASERA CAST WHEEL, REAR	1					YB YB
2	2DP–F517G–00	ROTOR DE SENSOR ROTOR, SENSOR	1					
3	90149–05030	TORNILLO DE REGLAJE SCREW	3					
4	94113–13809	NEUMATICO (130/70-13M/C 63P) TIRE (130/70-13M/C 63P)	1					INOUE
5	93900–00824	VALVULA VALVE, RIM	1					
6	90185–16800	TUERCA AUTOBLOCANTE NUT, SELF-LOCKING	1					

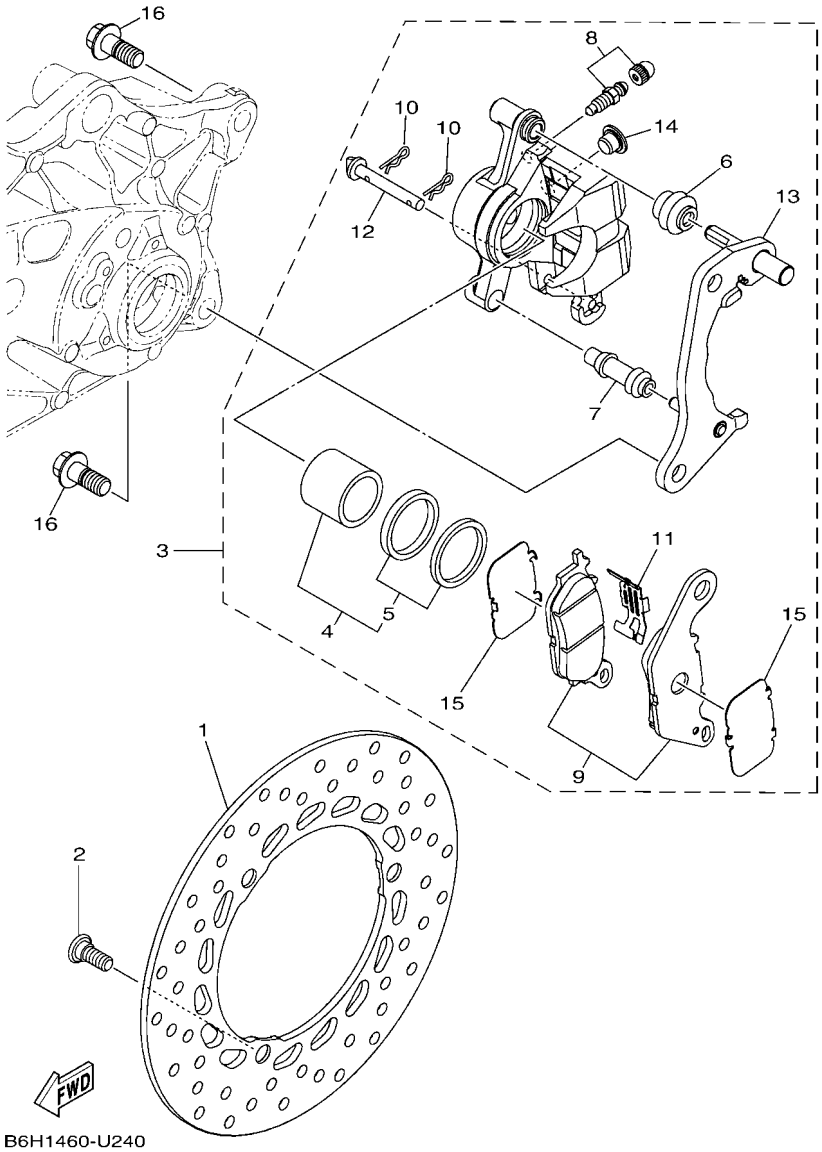

FIG. 24 CALIBRE FRENO TRASERA — REAR BRAKE CALIPER

REF. Nº	CODIGO Nº PART NO.	DESCRIPCION DESCRIPTION	BBE1					OBSERVACIONES REMARKS
1	2DP–F582W–00	DISCO DE FRENO TRASEROS 2 DISK, REAR BRAKE 2	1					
2	90109–08232	PERNO BOLT	3					
3	B6H–F580W–00	CALIBRE COMPLETO TRASEROS 2 CALIPER ASSY, REAR 2	1					
4	5P0–F5802–00	.PISTON COMPLETO PINZA .PISTON ASSY, CALIPER	1					
5	5YP–F5803–50	..JUEGO DE RETENES DE PINZA ..CALIPER SEAL KIT	1					
6	5YP–F5917–00	.FUNDA DE CALIBRE .BOOT, CALIPER	1					
7	5YP–F5937–00	.FUNDA .BOOT 2	1					
8	4C9–W0048–00	.CJTO TORNILLO DE PURGA .BLEED SCREW KIT	1					
9	B6H–F5805–00	.JUEGO DE COJIN DE FRENO .BRAKE PAD KIT	1					
10	5YP–F5925–01	.PRESILLA .CLIP	2					
11	5P0–F5919–01	.SOPORTE DE PASTILLAS .SUPPORT, PAD	1					
12	5YP–F5924–00	.PASADOR .PIN, PAD	1					
13	2DP–F5920–50	.SOPORTE .SUPT. BRKT. ASSY.	1					
14	2R6–F5916–00	.TAPON .PLUG	1					
15	5P0–F5827–00	.CUNA DE CALIBRE .SHIM, CALIPER	2					
16	95812–10030	TORNILLO DE REBORDE BOLT, FLANGE	2					

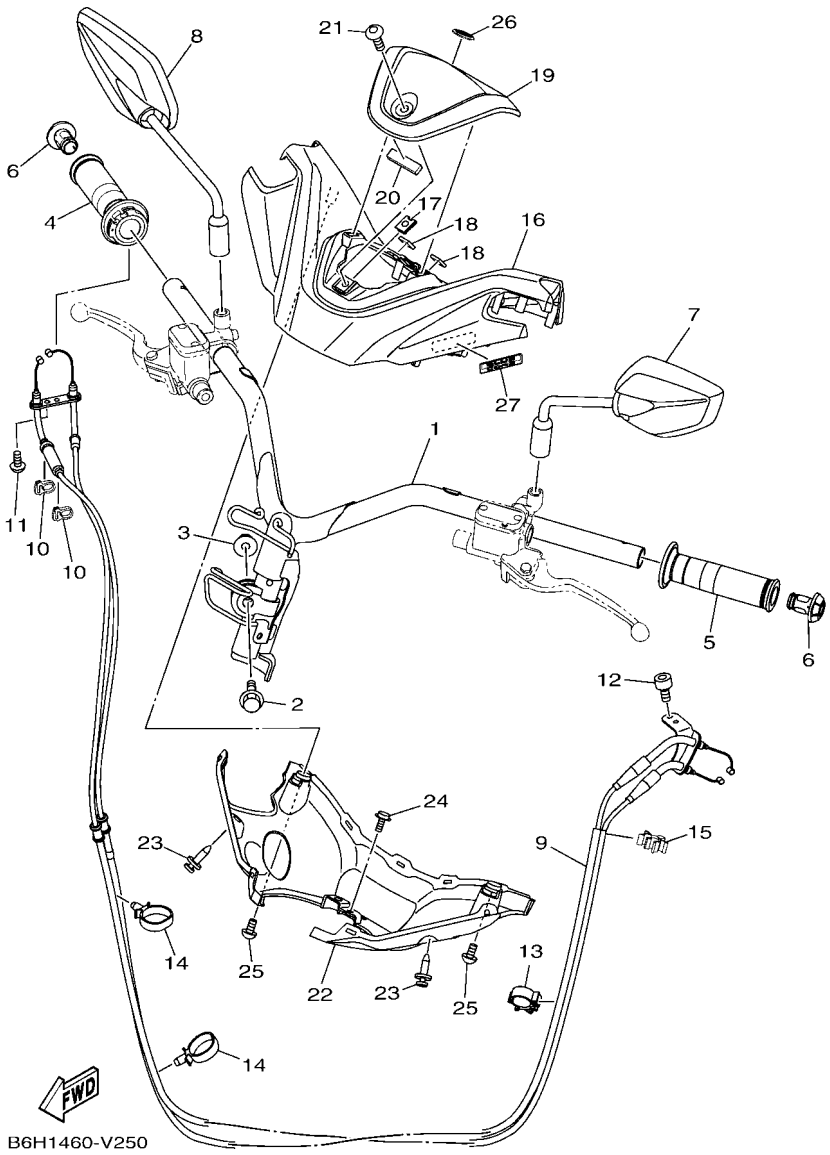

FIG. 25 MANILLAR & CABLE — STEERING HANDLE & CABLE

REF. Nº	CODIGO Nº PART NO.	DESCRIPCION DESCRIPTION	BBE1					OBSERVACIONES REMARKS
1	B6H–F6110–01	MANUBRIO COMPLETE HANDLE COMP.	1					
2	90105–10896	TORNILLO BOLT, FLANGE	1					
3	90185–10011	TUERCA AUTOBLOCANTE NUT, SELF-LOCKING	1					
4	B6H–F6240–00	EMPUNADURA COMPLETA GRIP ASSY	1					
5	2DP–F6241–00	EMPUNADURA GRIP	1					
6	2PH–F6246–00	EXTREMO DE EMPUNADURA END, GRIP	2					
7	2DP–F6280–10	ESPEJO COMPLETO (IZQUIERDO) REAR VIEW MIRROR ASSY (LEFT)	1					
8	2DP–F6290–10	ESPEJO COMPLETO (DERECHO) REAR VIEW MIRROR ASSY (RIGHT)	1					
9	B6H–F6301–00	CABLE DE ACELERADOR COMPLETO THROTTLE CABLE ASSY	1					
10	90464–08009	BRIDA CLAMP	2					
11	92017–05016	PERNO BOLT, BUTTON HEAD	1					
12	91312–05010	TORNILLO ALLEN BOLT, HEXAGON SOCKET HEAD	2					
13	90464–16808	BRIDA CLAMP	1					
14	90464–24230	BRIDA CLAMP	2					
15	90464–07807	BRIDA CLAMP	1					
16	B6H–F6143–00	CUBIERTA DE MANUBRIO SUPERIOR1 COVER, HANDLE UPPER 1	1					
17	90183–06818	TUERCA DE RESORTE NUT, SPRING	1					
18	90520–02849	EQUILIBRIO, CUBIERTA DAMPER, PLATE	2					
19	BBE–F6219–00–P0	EMBLEMA EMBLEM	1					MNM3 MNM3
20	90520–02014	EQUILIBRIO, CUBIERTA DAMPER, PLATE	1					
21	90149–06104	TORNILLO DE REGLAJE SCREW	1					
22	B6H–F6144–00	CUBIERTA DE MANUBRIO INFERIOR1 COVER, HANDLEBAR LOWER 1	1					
23	90269–06816	REMACHE RIVET	2					
24	90159–05032	TORNILLO CON VALONA SCREW, WITH WASHER	1					
25	90160–05014	TORNILLO REDONDO ROSCA HEMBRA SCREW, ROUND TAPPING	2					
26	BK3–F1737–00	EMBLEMA EMBLEM	1					
27	BK3–F1737–10	EMBLEMA EMBLEM	1					

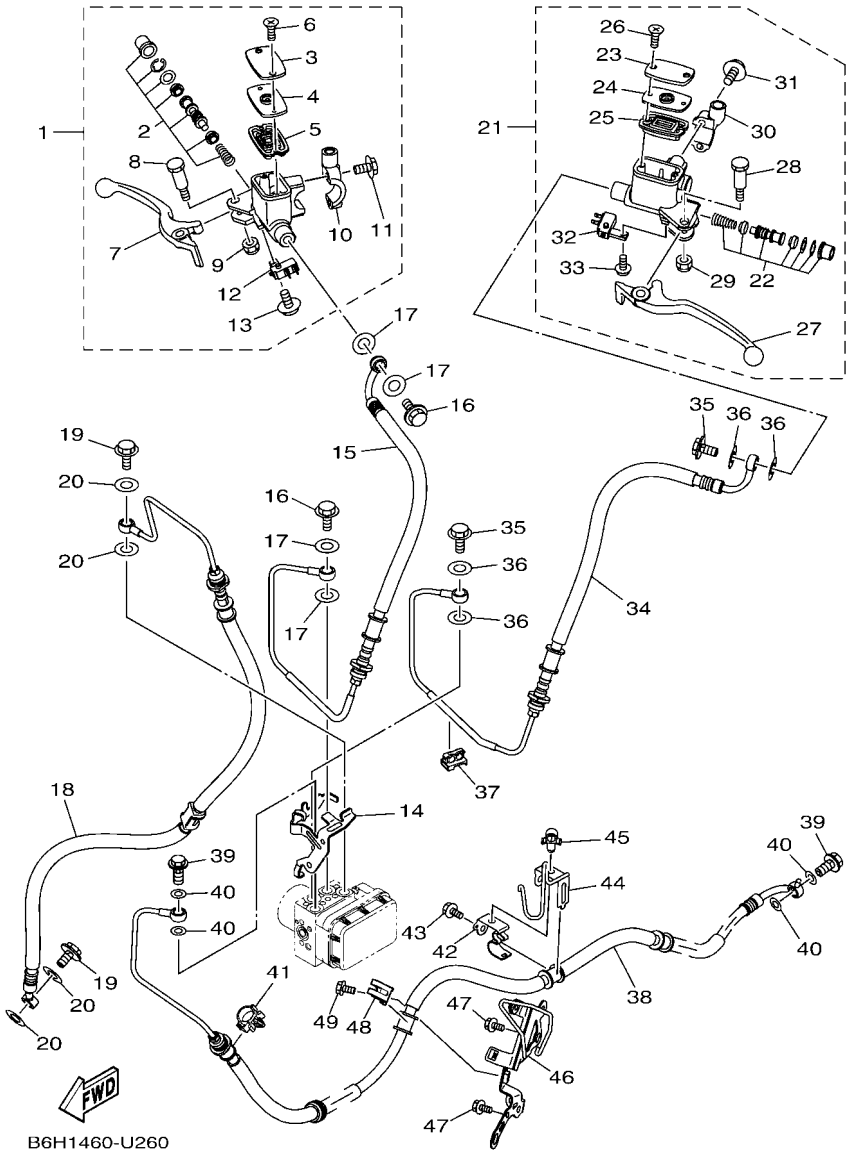

FIG. 26 CILINDRO MAESTRO DELANTERO — FRONT MASTER CYLINDER

REF. Nº	CODIGO Nº PART NO.	DESCRIPCION DESCRIPTION	BBE1					OBSERVACIONES REMARKS
1	B6H–F583T–00	CILINDRO MAESTRO COMPLETO MASTER CYLINDER ASSY	1					
2	2DP–F5807–00	.JUEGO DE CILINDRO MAESTRO .CYLINDER KIT, MASTER	1					
3	2DP–F5852–00	.TAPA DE TANQUE DE RESERVA .CAP, RESERVOIR	1					
4	5HV–F585B–10	.PLACA, DIAFRAGMA .PLATE, DIAPHRAGM	1					
5	5HV–F5854–10	.EMPAQUE,DIAFRAGMA .DIAPHRAGM, RESERVOIR	1					
6	98707–04012	.TORNILLO DE CABEZA PLANA .SCREW, FLAT HEAD	2					
7	2DP–H3922–00	.PALANCA 2 .LEVER 2	1					
8	2DP–F589F–00	.PERNO DE PALANCA .BOLT, LEVER	1					
9	95602–06100	.TUERCA AUTOBLOCANTE .NUT, SELF-LOCKING	1					
10	2DP–F5867–10	.SOPORTE DE CILINDRO MAESTRO .BRACKET, MASTER CYLINDER	1					
11	1S9–F6332–00	.TORNILLO .BOLT	2					
12	B6H–H3980–00	.INTERRUP. DE PARADA DELANTERO .FRONT STOP SWITCH ASSY	1					
13	97602–04312	.TORNILLO CON RONDONA .SCREW, PAN HEAD WITH WASHER	1					
14	B6H–F6257–00	TOPE STOPPER	1					
15	B6H–F5872–00	MANGUERA DE FRENO 1 HOSE, BRAKE 1	1					
16	90401–10812	PERNO DE UNION BOLT, UNION	2					
17	90201–10118	ARANDELA PLANA WASHER, PLATE	4					
18	B6H–F5873–00	MANGUERA DE FRENO 2 HOSE, BRAKE 2	1					
19	90401–10812	PERNO DE UNION BOLT, UNION	2					
20	90201–10118	ARANDELA PLANA WASHER, PLATE	4					
21	B6H–F583V–00	CILINDRO, MAESTRO TRASERO RR. MASTER CYLINDER ASSY.	1					
22	2DP–F5807–10	.JUEGO DE CILINDRO MAESTRO .CYLINDER KIT, MASTER	1					
23	2DP–F5852–00	.TAPA DE TANQUE DE RESERVA .CAP, RESERVOIR	1					
24	5HV–F585B–10	.PLACA, DIAFRAGMA .PLATE, DIAPHRAGM	1					
25	5HV–F5854–10	.EMPAQUE,DIAFRAGMA .DIAPHRAGM, RESERVOIR	1					
26	98707–04012	.TORNILLO DE CABEZA PLANA .SCREW, FLAT HEAD	2					
27	2DP–H3912–00	.PALANCA 1 .LEVER 1	1					

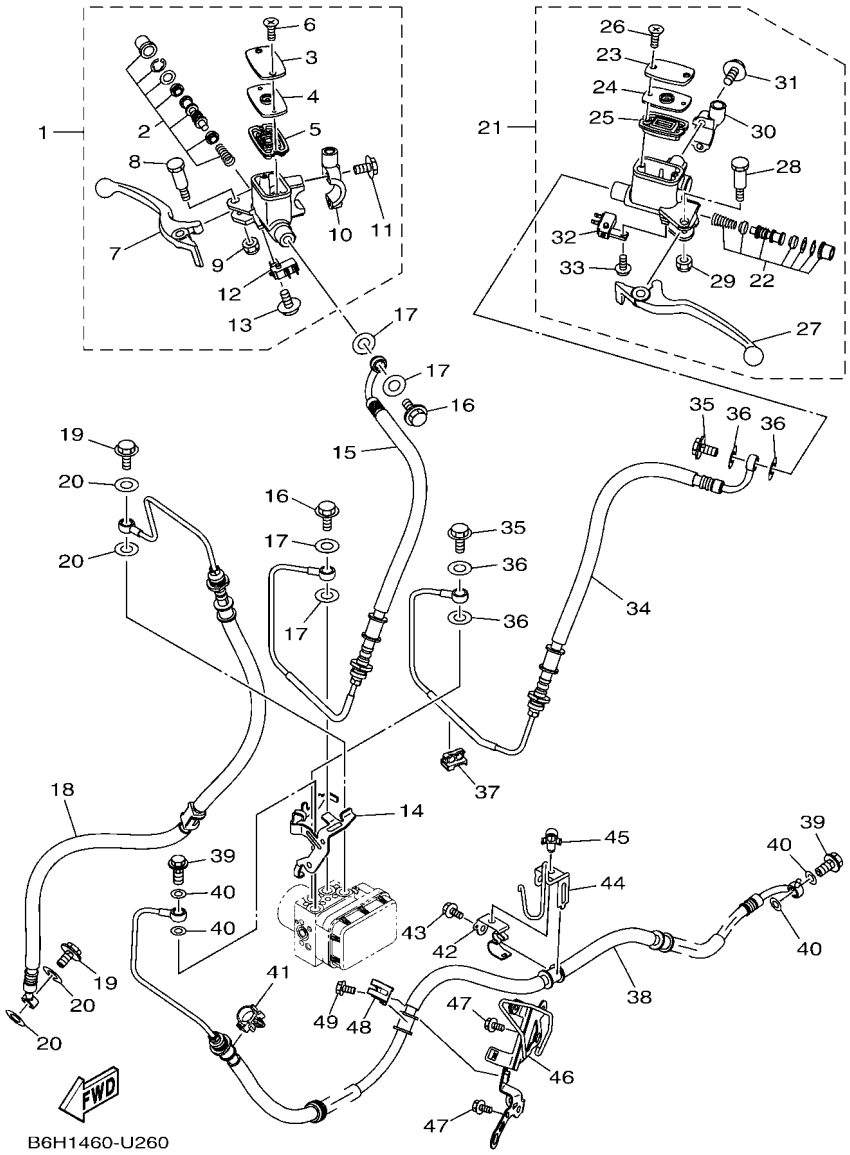

FIG. 26 CILINDRO MAESTRO DELANTERO — FRONT MASTER CYLINDER

REF. Nº	CODIGO Nº PART NO.	DESCRIPCION DESCRIPTION	BBE1					OBSERVACIONES REMARKS
28	2DP–F589F–00	.PERNO DE PALANCA .BOLT, LEVER	1					
29	95602–06100	.TUERCA AUTOBLOCANTE .NUT, SELF-LOCKING	1					
30	2DP–F5867–00	.SOPORTE DE CILINDRO MAESTRO .BRACKET, MASTER CYLINDER	1					
31	1S9–F6332–00	.TORNILLO .BOLT	2					
32	B6H–H2530–00	.INTERRUPTOR DE PARADA COMPLETO .STOP SWITCH ASSY	1					
33	97602–04312	.TORNILLO CON RONDONA .SCREW, PAN HEAD WITH WASHER	1					
34	B6H–F5874–00	MANGUERA DE FRENO HOSE, BRAKE 3	1					
35	90401–10812	PERNO DE UNION BOLT, UNION	2					
36	90201–10118	ARANDELA PLANA WASHER, PLATE	4					
37	90464–07014	BRIDA CLAMP	1					
38	B6H–F581J–00	MANGUERA, DE FRENO 4 HOSE, BRAKE 4	1					
39	90401–10812	PERNO DE UNION BOLT, UNION	2					
40	90201–10118	ARANDELA PLANA WASHER, PLATE	4					
41	90464–16808	BRIDA CLAMP	1					
42	B6H–F5887–00	SOPORTE DE MANGUERA FRENO HOLDER, BRAKE HOSE 3	1					
43	95D02–06012	CERROJO, REBORDE HUECO PROFUND BOLT, FLANGE DEEP RECESS	1					
44	B6H–F5522–00	SOSTEN HOLDER	1					
45	90464–07805	BRIDA CLAMP	1					
46	B6H–F194U–00	SOPORTE FIJACION BOBINA STAY, IGNITION COIL	1					
47	95E32–06012	CERROJO, REBORDE HUECO PROFUND BOLT, FLANGE DEEP RECESS	2					
48	B6H–F587A–00	SOPORTE DE MANGUERA FRENO HOLDER, BRAKE HOSE 4	1					
49	95E32–06012	CERROJO, REBORDE HUECO PROFUND BOLT, FLANGE DEEP RECESS	1					

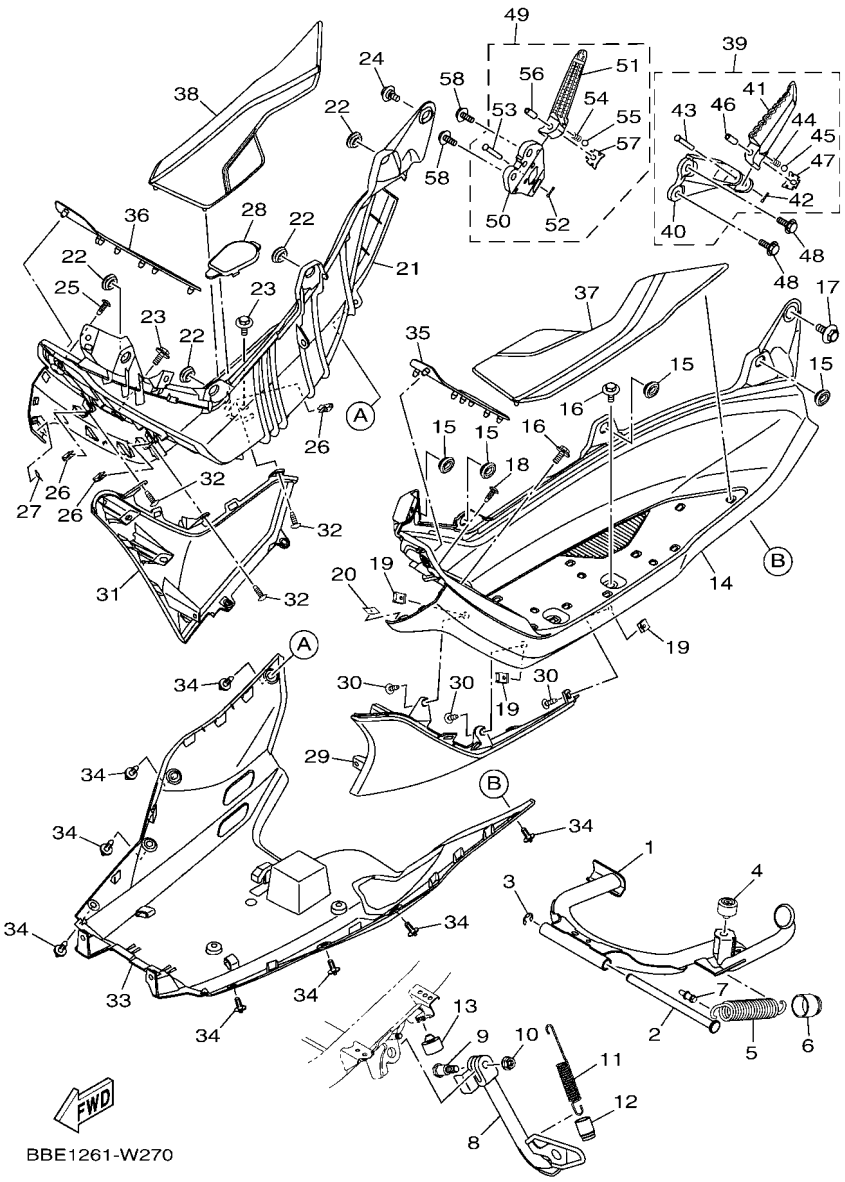

FIG. 27 SOPORTE & APOYAPIE — STAND & FOOTREST

REF. Nº	CODIGO Nº PART NO.	DESCRIPCION DESCRIPTION	BBE1					OBSERVACIONES REMARKS
1	B6H–F7111–00	PUNTAL PRINCIPAL STAND, MAIN	1					
2	B6H–F7112–00	EJE DE PUNTAL PRINCIPAL SHAFT, MAIN STAND	1					
3	99002–09600	PRESILLA REDONDA CIRCLIP	1					
4	54P–F7114–00	TOPE DE PUNTAL PRINCIPAL STOPPER, MAIN STAND	1					
5	90506–40806	RESORTE DE TENSION SPRING, TENSION	1					
6	B6H–F247A–00	TUBO 1 HOSE 1	1					
7	1LB–F7254–00	GANCHO HOOK	1					
8	BBE–F7311–00	PUNTAL LATERAL STAND, SIDE	1					
9	B65–F7217–00	PERNO. BOLT	1					
10	95602–10200	TUERCA DE AUTO-CIERRE NUT, S/L FLANGE	1					
11	90506–20818	RESORTE DE TENSION SPRING, TENSION	1					
12	B6H–F247B–00	TUBO 2 HOSE 2	1					
13	54P–F7114–00	TOPE DE PUNTAL PRINCIPAL STOPPER, MAIN STAND	1					
14	B6H–F7481–00	TABLERO DE APOYAPIE BOARD, FOOTREST	1					
15	90480–01559	TAPON GROMMET	4					
16	90119–06051	TORNILLO CON ARANDELA BOLT, WITH WASHER	2					
17	90109–068B2	PERNO BOLT	1					
18	97702–50016	TORNILLO ROSCA HEMBRA SCREW,TAPPING	1					
19	90183–05807	TUERCA DE RESORTE NUT, SPRING	3					
20	90520–02849	EQUILIBRIO, CUBIERTA DAMPER, PLATE	1					
21	B6H–F7488–00	TABLERO DE APOYAPIE 2 BOARD, FOOTREST 2	1					
22	90480–01559	TAPON GROMMET	4					
23	90119–06051	TORNILLO CON ARANDELA BOLT, WITH WASHER	2					
24	90109–068B2	PERNO BOLT	1					
25	97702–50016	TORNILLO ROSCA HEMBRA SCREW,TAPPING	1					
26	90183–05807	TUERCA DE RESORTE NUT, SPRING	3					
27	90520–02849	EQUILIBRIO, CUBIERTA DAMPER, PLATE	1					

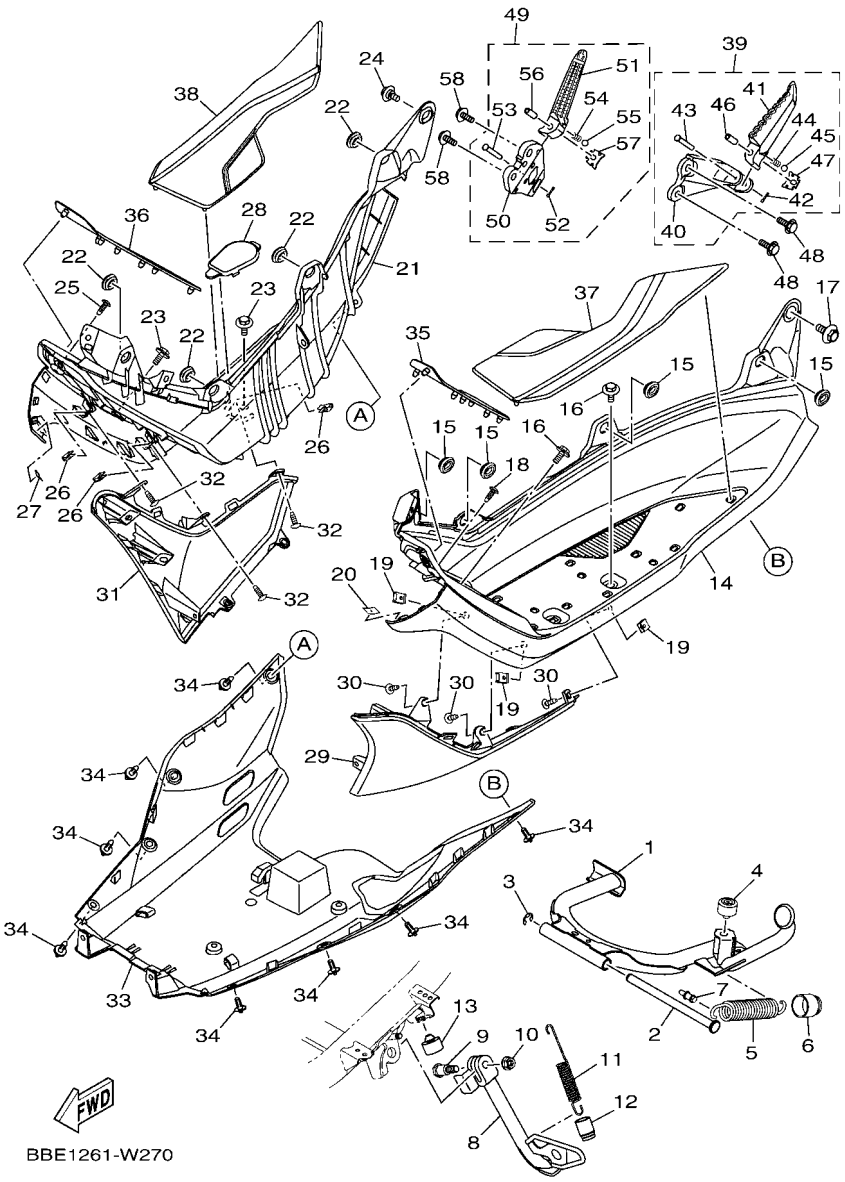

FIG. 27 SOPORTE & APOYAPIE — STAND & FOOTREST

REF. Nº	CODIGO Nº PART NO.	DESCRIPCION DESCRIPTION	BBE1					OBSERVACIONES REMARKS
28	2DP–F172W–00	CUBIERTA COVER	1					
29	BBE–F171L–00–P0	MUELLE , CUBIERTA LATERAL 1 MOLE, SIDE COVER 1	1					UR PARA BWM1 UR FOR BWM1
	BBE–F171L–00–P1	MUELLE , CUBIERTA LATERAL 1 MOLE, SIDE COVER 1	1					UR PARA MBL2 UR FOR MBL2
	BBE–F171L–00–P2	MUELLE , CUBIERTA LATERAL 1 MOLE, SIDE COVER 1	1					UR PARA DPBML UR FOR DPBML
30	97702–50016	TORNILLO ROSCA HEMBRA SCREW,TAPPING	3					
31	BBE–F171M–00–P0	MUELLE, CUBIERTA LATERAL 2 MOLE, SIDE COVER 2	1					UR PARA BWM1 UR FOR BWM1
	BBE–F171M–00–P1	MUELLE, CUBIERTA LATERAL 2 MOLE, SIDE COVER 2	1					UR PARA MBL2 UR FOR BML2
	BBE–F171M–00–P2	MUELLE, CUBIERTA LATERAL 2 MOLE, SIDE COVER 2	1					UR PARA DPBML UR FOR DPBML
32	97702–50016	TORNILLO ROSCA HEMBRA SCREW,TAPPING	3					
33	B6H–F8385–00	CUBIERTA INFERIOR COVER, UNDER	1					
34	90269–06816	REMACHE RIVET	8					
35	B6H–F7483–00	TAPETE 1 MAT 1	1					
36	B6H–F7484–00	TAPETE 2 MAT 2	1					
37	B6H–F7493–00	TAPETE 3 MAT 3	1					
38	B6H–F7494–00	TAPETE 4 MAT 4	1					
39	BBE–F7430–00	APOYAPIE POSTERIOR COMPLETO 1 REAR FOOTREST ASSY 1	1					
40	BBE–F741L–00	.MENSULA 4 .BRACKET 4	1					
41	BK3–F7431–00	.APOYAPIE POSTERIOR 1 .FOOTREST, REAR 1	1					
42	91402–20012	.CHAVETA .PIN, COTTER	1					
43	91702–06038	.PASADOR DE ADRAZADERA .PIN, CLEVIS	1					
44	90501–12743	.RESORTE DE COMPRESION .SPRING, COMPRESSION	1					
45	93501–04830	.BOLA .BALL	1					
46	90387–064H8	.ESPACIADOR .COLLAR	1					
47	2DP–F7437–01	.ARANDELA ESPECIAL .WASHER, SPECIAL	1					
48	95E32–08020	CERROJO, REBORDE HUECO PROFUND BOLT, FLANGE DEEP RECESS	2					
49	BBE–F7440–00	APOYAPIE POSTERIOR COMPLETO 2 REAR FOOTREST ASSY 2	1					
50	BBE–F742L–00	.MENSULA 5 .BRACKET 5	1					

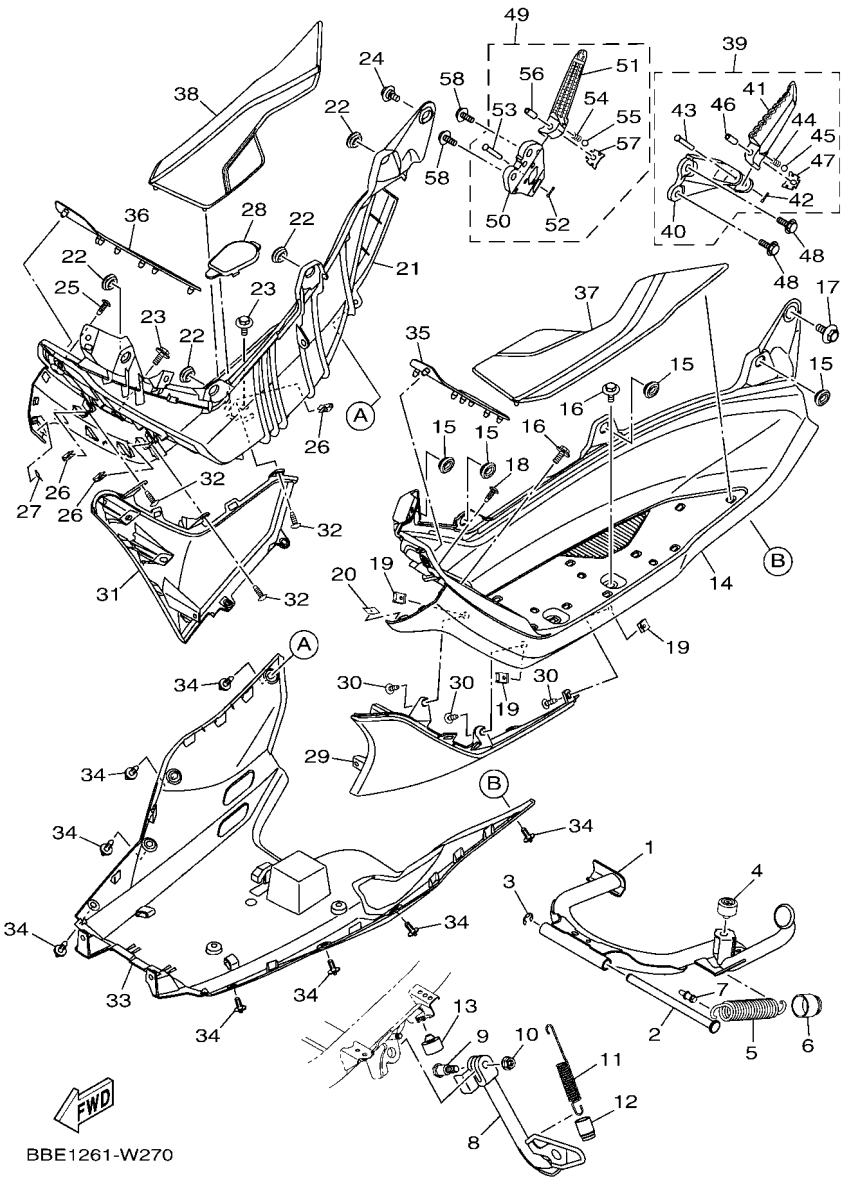

FIG. 27 SOPORTE & APOYAPIE — STAND & FOOTREST

REF. Nº	CODIGO Nº PART NO.	DESCRIPCION DESCRIPTION	BBE1					OBSERVACIONES REMARKS
51	BK3–F7441–00	.APOYAPIE POSTERIOR 2 .FOOTREST, REAR 2	1					
52	91402–20012	.CHAVETA .PIN, COTTER	1					
53	91702–06038	.PASADOR DE ADRAZADERA .PIN, CLEVIS	1					
54	90501–12743	.RESORTE DE COMPRESION .SPRING, COMPRESSION	1					
55	93501–04830	.BOLA .BALL	1					
56	90387–064H8	.ESPACIADOR .COLLAR	1					
57	2DP–F7437–01	.ARANDELA ESPECIAL .WASHER, SPECIAL	1					
58	95E32–08020	CERROJO, REBORDE HUECO PROFUND BOLT, FLANGE DEEP RECESS	2					

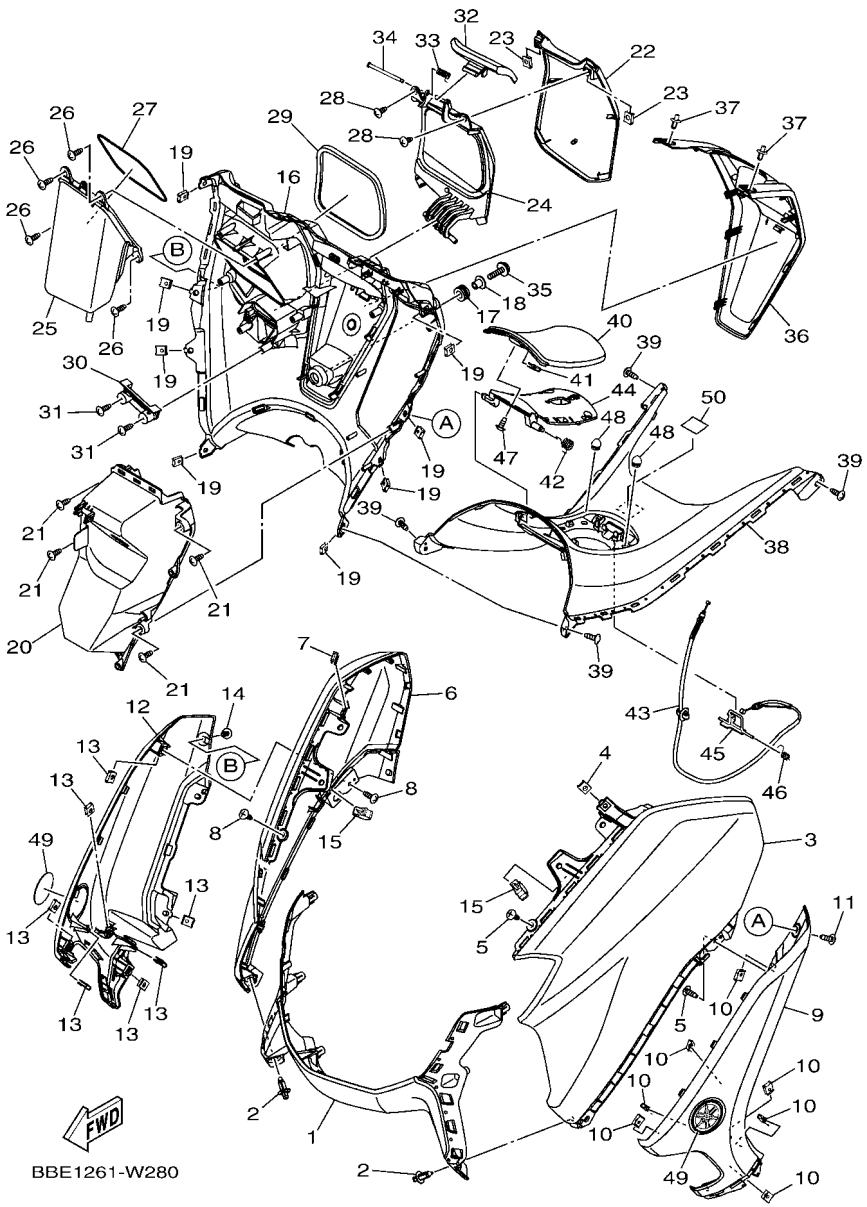

FIG. 28 PATA PROTEGIDA — LEG SHIELD

REF. Nº	CODIGO Nº PART NO.	DESCRIPCION DESCRIPTION	BBE1					OBSERVACIONES REMARKS
1	BBE–F286F–00–P0	DECKEL, FRONT 2 COVER, FRONT 2	1					UR PARA BWM1 UR FOR BWM1
	BBE–F286F–00–P1	DECKEL, FRONT 2 COVER, FRONT 2	1					UR PARA MBL2 UR FOR MBL2
	BBE–F286F–00–P2	DECKEL, FRONT 2 COVER, FRONT 2	1					UR PARA DPBML UR FOR DPBML
2	90269–06816	REMACHE RIVET	2					
3	BBE–F8351–00–P0	CUERPO DE COBERTURA BODY, COWLING	1					UR PARA BWM1 UR FOR BWM1
	BBE–F8351–00–P1	CUERPO DE COBERTURA BODY, COWLING	1					UR PARA MBL2 UR FOR MBL2
	BBE–F8351–00–P2	CUERPO DE COBERTURA BODY, COWLING	1					UR PARA DPBML UR FOR DPBML
4	90183–05807	TUERCA DE RESORTE NUT, SPRING	1					
5	97702–50016	TORNILLO ROSCA HEMBRA SCREW,TAPPING	2					
6	BBE–F8377–00–P0	CUERPO, DE COBERTURE 2 BODY, COWLING 2	1					UR PARA BWM1 UR FOR BWM1
	BBE–F8377–00–P1	CUERPO, DE COBERTURE 2 BODY, COWLING 2	1					UR PARA MBL2 UR FOR MBL2
	BBE–F8377–00–P2	CUERPO, DE COBERTURE 2 BODY, COWLING 2	1					UR PARA DPBML UR FOR DPBML
7	90183–05807	TUERCA DE RESORTE NUT, SPRING	1					
8	97702–50016	TORNILLO ROSCA HEMBRA SCREW,TAPPING	2					
9	B6H–F835U–00	PANEL 1 PANEL 1	1					
10	90183–05807	TUERCA DE RESORTE NUT, SPRING	7					
11	90160–05009	TORNILLO REDONDO ROSCA HEMBRA SCREW, ROUND TAPPING	1					
12	B6H–F835V–00	PANEL 2 PANEL 2	1					
13	90183–05807	TUERCA DE RESORTE NUT, SPRING	7					
14	90160–05009	TORNILLO REDONDO ROSCA HEMBRA SCREW, ROUND TAPPING	1					
15	90464–16808	BRIDA CLAMP	2					
16	B6H–F8311–00	PROTECCION DE PATA 1 LEG SHIELD 1	1					
17	90480–14825	TAPON GROMMET	1					
18	90387–07391	ESPACIADOR COLLAR	1					
19	90183–05807	TUERCA DE RESORTE NUT, SPRING	8					
20	B6H–F836K–00	PANEL 1 PANEL, INNER 1	1					
21	97702–50016	TORNILLO ROSCA HEMBRA SCREW,TAPPING	4					

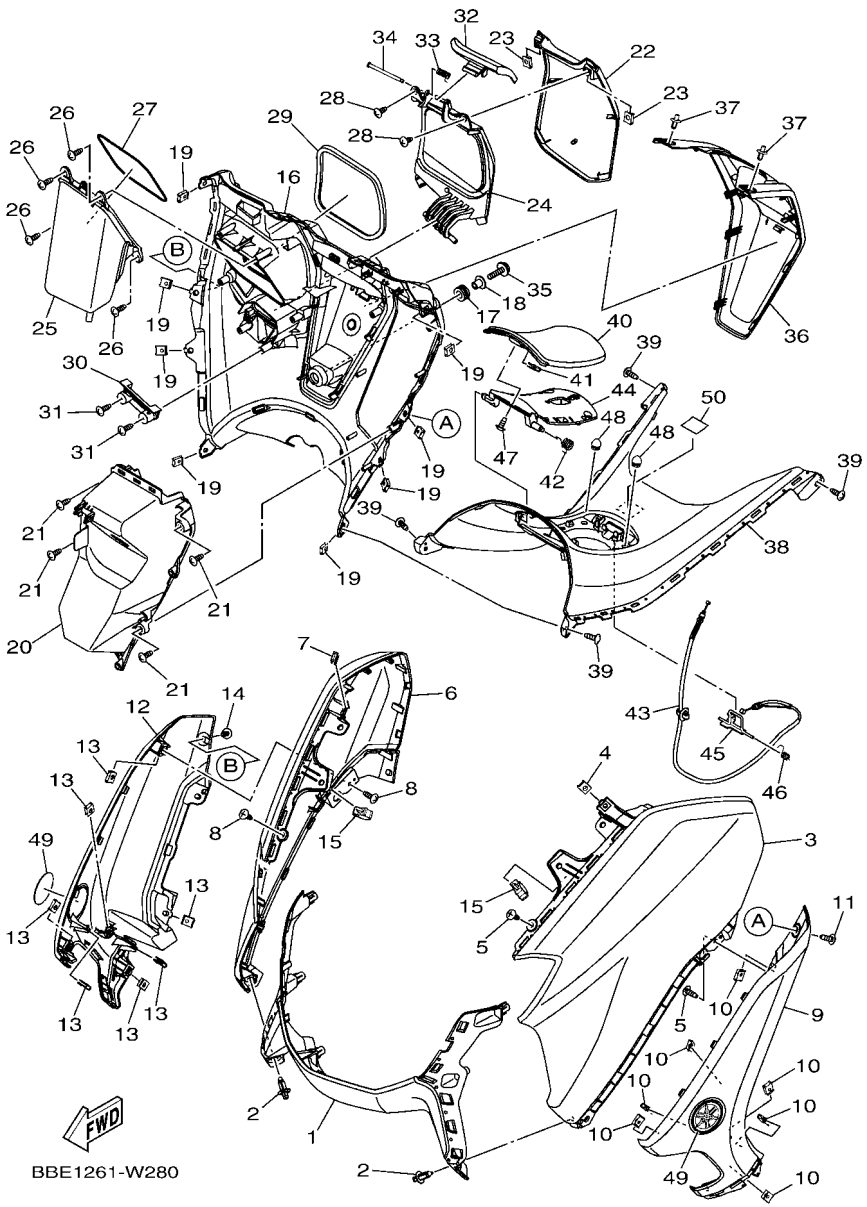

FIG. 28 PATA PROTEGIDA — LEG SHIELD

REF. Nº	CODIGO Nº PART NO.	DESCRIPCION DESCRIPTION	BBE1					OBSERVACIONES REMARKS
22	B6H–F177E–00	TAPA LID	1					
23	90183–05807	TUERCA DE RESORTE NUT, SPRING	2					
24	B6H–F8321–00	SOPORTE STAY 1	1					
25	B6H–F838K–00	CAJA 1 BOX 1	1					
26	97702–50016	TORNILLO ROSCA HEMBRA SCREW,TAPPING	4					
27	B6H–F838M–00	SELLO, CAJA 1 SEAL, BOX 1	1					
28	97707–50012	TORNILLO SCREW, TRUSS HEAD TAPPING	2					
29	90520–06817	EQUILIBRIO, CUBIERTA DAMPER, PLATE	1					
30	B6H–F1796–00	BISAGRA HINGE	1					
31	97702–50016	TORNILLO ROSCA HEMBRA SCREW,TAPPING	2					
32	B6H–F836X–00	PERILLA, 1 KNOB, 1	1					
33	90508–12800	RESORTE DE TORSION SPRING, TORSION	1					
34	90249–03017	PASADOR PIN	1					
35	95D32–06025	CERROJO, REBORDE HUECO PROFUND BOLT, FLANGE DEEP RECESS	1					
36	BBE–F8312–00–P0	PROTECCION DE PATA 2 LEG SHIELD 2	1					MNM3 MNM3
37	90269–06816	REMACHE RIVET	2					
38	B6H–F842M–00	CUBIERTA 1 COVER 1	1					
39	97702–50016	TORNILLO ROSCA HEMBRA SCREW,TAPPING	4					
40	B6H–F74A8–00	TAPA DE COMBUSTIBLE LID, FUEL	1					
41	90183–05807	TUERCA DE RESORTE NUT, SPRING	1					
42	B6H–F7426–00	RESORTE DE RETORNO SPRING, RETURN	1					
43	B6H–F4494–00	ALAMBLE-JALADOR WIRE, PULL	1					
44	B6H–F839K–00	TAPA 1 LID 1	1					
45	B6H–F131C–00	BARRA DE BLOQUEO BAR LOCK	1					
46	B6H–F7456–00	RESORTE DE RETORNO SPRING, RETURN	1					
47	97707–50012	TORNILLO SCREW, TRUSS HEAD TAPPING	1					
48	4G0–21639–00	AMORTIGUADOR 2 DAMPER 2	2					

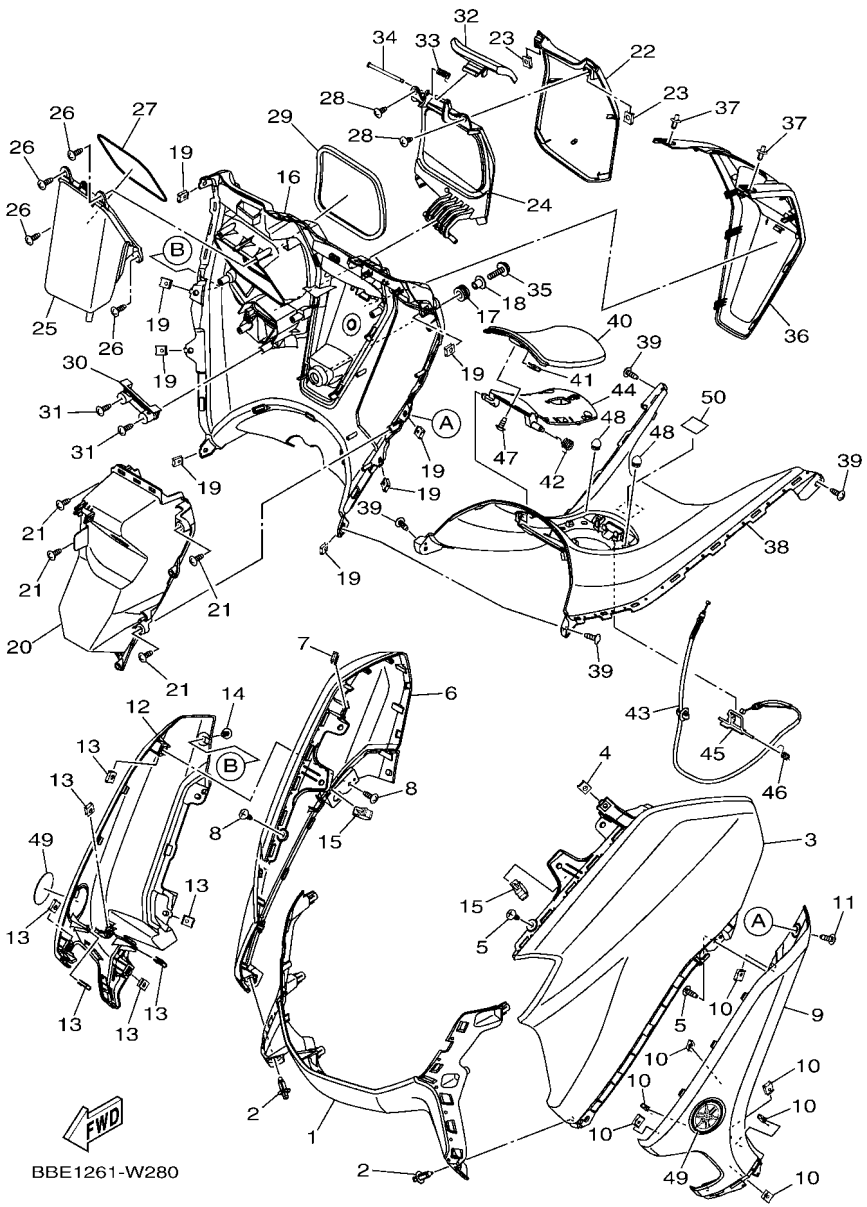

FIG. 28 PATA PROTEGIDA — LEG SHIELD

REF. Nº	CODIGO Nº PART NO.	DESCRIPCION DESCRIPTION	BBE1					OBSERVACIONES REMARKS
49	BK3–F413B–00	EMBLEMA EMBLEM	2					
50	BBE–F1568–00	ETIQUETA DE PRECAUCION LABEL, WARNING	1					

FIG. 29 PARABRISAS — WINDSHIELD

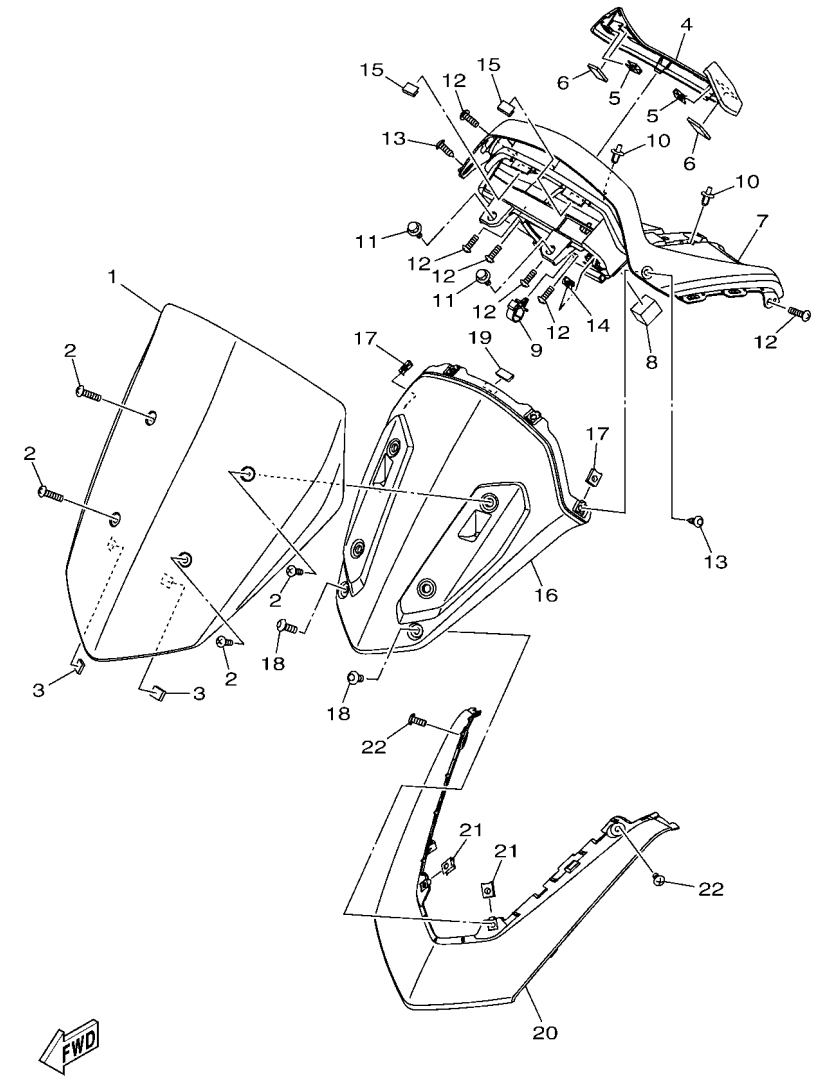

REF. Nº	CODIGO Nº PART NO.	DESCRIPCION DESCRIPTION	BBE1					OBSERVACIONES REMARKS
1	B1T–F61AA–00	VISERA VISOR	1					
2	90150–05008	TORNILLO CABEZA REDONDA SCREW, ROUND HEAD	4					
3	90520–02849	EQUILIBRIO, CUBIERTA DAMPER, PLATE	2					
4	BBE–H3559–00–P0	CUBIERTA DE MEDIDOR COVER, METER	1					MNM3 MNM3
5	90183–05807	TUERCA DE RESORTE NUT, SPRING	2					
6	90520–02850	EQUILIBRIO, CUBIERTA DAMPER, PLATE	2					
7	B6H–F837L–00	PANEL DE CONSOLA PANEL, CONSOLE 1	1					
8	90520–20800	EQUILIBRIO, CUBIERTA DAMPER, PLATE	1					
9	90464–16808	BRIDA CLAMP	1					
10	90269–06816	REMACHE RIVET	2					
11	90109–068B2	PERNO BOLT	2					
12	97702–50016	TORNILLO ROSCA HEMBRA SCREW,TAPPING	6					
13	90160–05009	TORNILLO REDONDO ROSCA HEMBRA SCREW, ROUND TAPPING	2					
14	90183–05807	TUERCA DE RESORTE NUT, SPRING	1					
15	B6H–F8428–00	SELLO 1 SEAL 1	2					
16	B6H–F837M–00	PANEL, DE CONSOLA 2 PANEL, CONSOLE 2	1					
17	90183–05807	TUERCA DE RESORTE NUT, SPRING	2					
18	90160–05009	TORNILLO REDONDO ROSCA HEMBRA SCREW, ROUND TAPPING	2					
19	B6H–F8428–00	SELLO 1 SEAL 1	1					
20	BBE–F2865–00–P0	CUBIERTA, FRENTE COVER, FRONT	1					UR PARA BWM1 UR FOR BWM1
	BBE–F2865–00–P1	CUBIERTA, FRENTE COVER, FRONT	1					UR PARA MBL2 UR FOR MBL2
	BBE–F2865–00–P2	CUBIERTA, FRENTE COVER, FRONT	1					UR PARA DPBML UR FOR DPBML
21	90183–05807	TUERCA DE RESORTE NUT, SPRING	2					
22	97702–50016	TORNILLO ROSCA HEMBRA SCREW,TAPPING	2					

FIG. 30 GENERADOR — GENERATOR

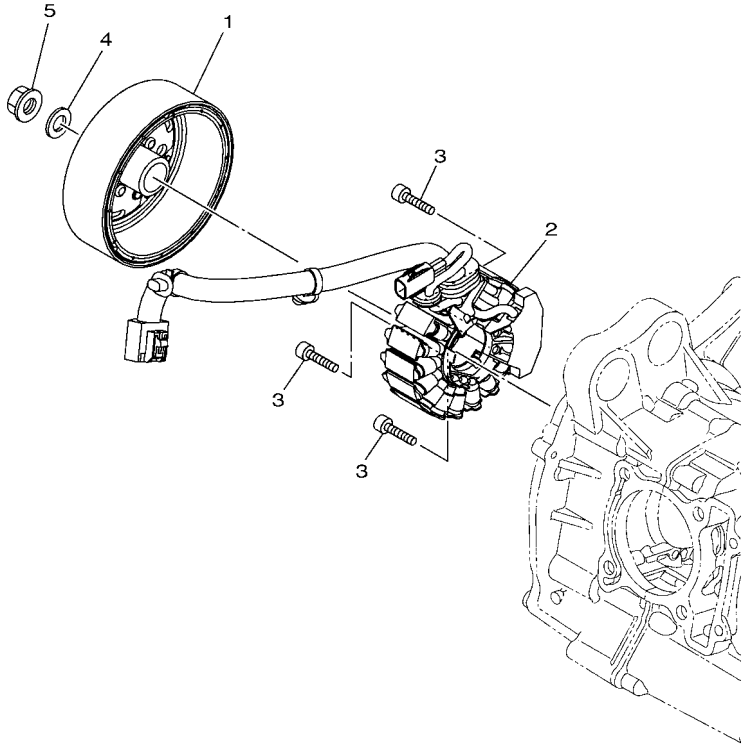

B6H1460-U310

REF. Nº	CODIGO Nº PART NO.	DESCRIPCION DESCRIPTION	BBE1					OBSERVACIONES REMARKS
1	B6H–H1450–00	ROTOR COMPLETO ROTOR ASSY	1					
2	B6H–H1410–00	ESTATOR COMPLETO STATOR ASSY	1					
3	90110–06880	TORNILLO ALLEN BOLT, HEXAGON SOCKET HEAD	3					
4	90201–12688	ARANDELA PLANA WASHER, PLATE	1					
5	90179–12004	TUERCA NUT	1					

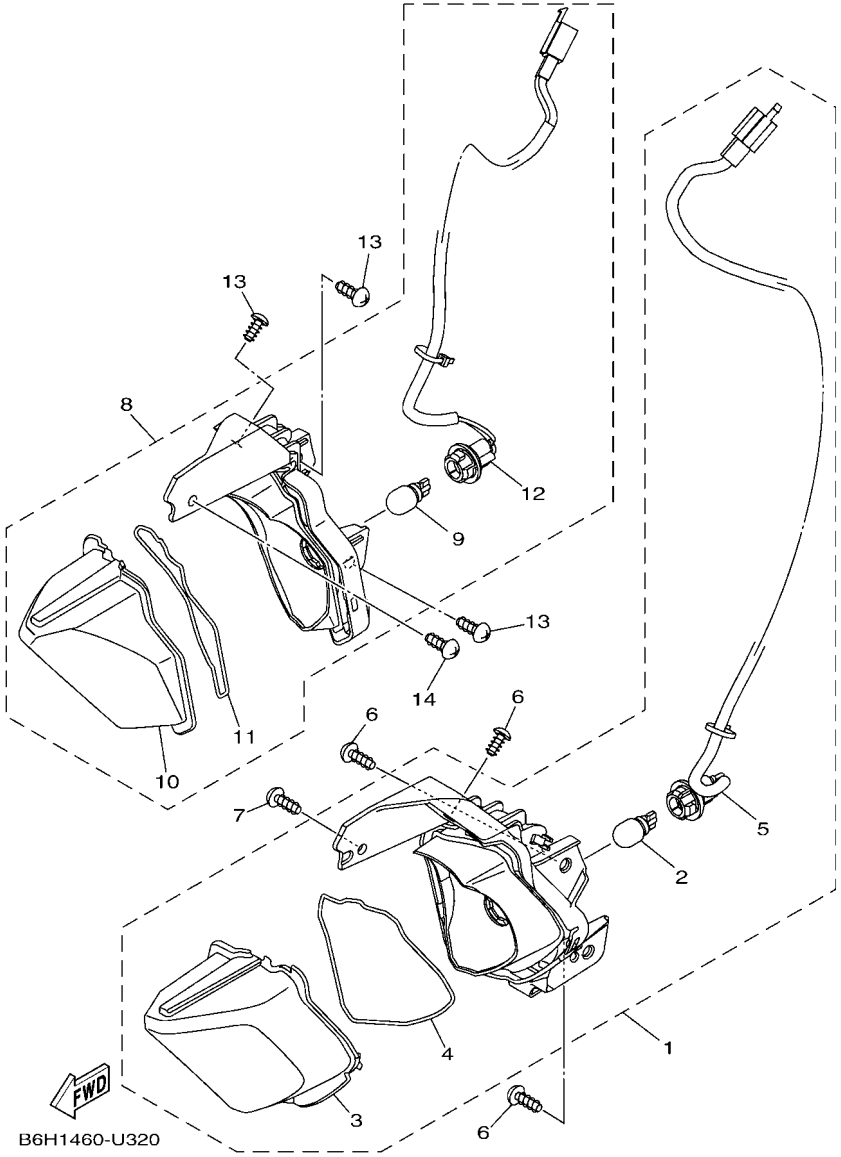

FIG. 31 LUZ DE DESTELLADOR — FLASHER LIGHT

REF. Nº	CODIGO Nº PART NO.	DESCRIPCION DESCRIPTION	BBE1					OBSERVACIONES REMARKS
1	B6H–H3310–00	DESTELLADOR DE LUZ DELANT. FRONT FLASHER LIGHT ASSY 1	1					
2	2CB–H3311–00	.BOMBILLA (12V-10W) .BULB, FLASHER (12V-10W)	1					
3	B6H–H3312–00	.LENTE DE DESTELLADOR .LENS, FLASHER	1					
4	B6H–H4723–00	.EMPAQUE LENTE FARO TRASERO .GASKET, TAIL LENS	1					
5	B6H–H4140–00	.ENCASTRE DE CABLE COMPLETO .SOCKET CORD ASSY	1					
6	97702–50014	TORNILLO ROSCA HEMBRA SCREW, TAPPING	3					
7	97707–50016	TORNILLO SCREW, TRUSS HEAD TAPPING	1					
8	B6H–H3320–00	DESTELLADOR DE LUZ DELANT. FRONT FLASHER LIGHT ASSY 2	1					
9	2CB–H3311–00	.BOMBILLA (12V-10W) .BULB, FLASHER (12V-10W)	1					
10	B6H–H3322–00	.LENTE DE INTERMITENTE 2 .LENS, FLASHER 2	1					
11	B6H–H4723–00	.EMPAQUE LENTE FARO TRASERO .GASKET, TAIL LENS	1					
12	B6H–H4150–00	.ENCASTRE DE CABLE COMPLETO 2 .SOCKET CORD ASSY 2	1					
13	97702–50014	TORNILLO ROSCA HEMBRA SCREW, TAPPING	3					
14	97707–50016	TORNILLO SCREW, TRUSS HEAD TAPPING	1					

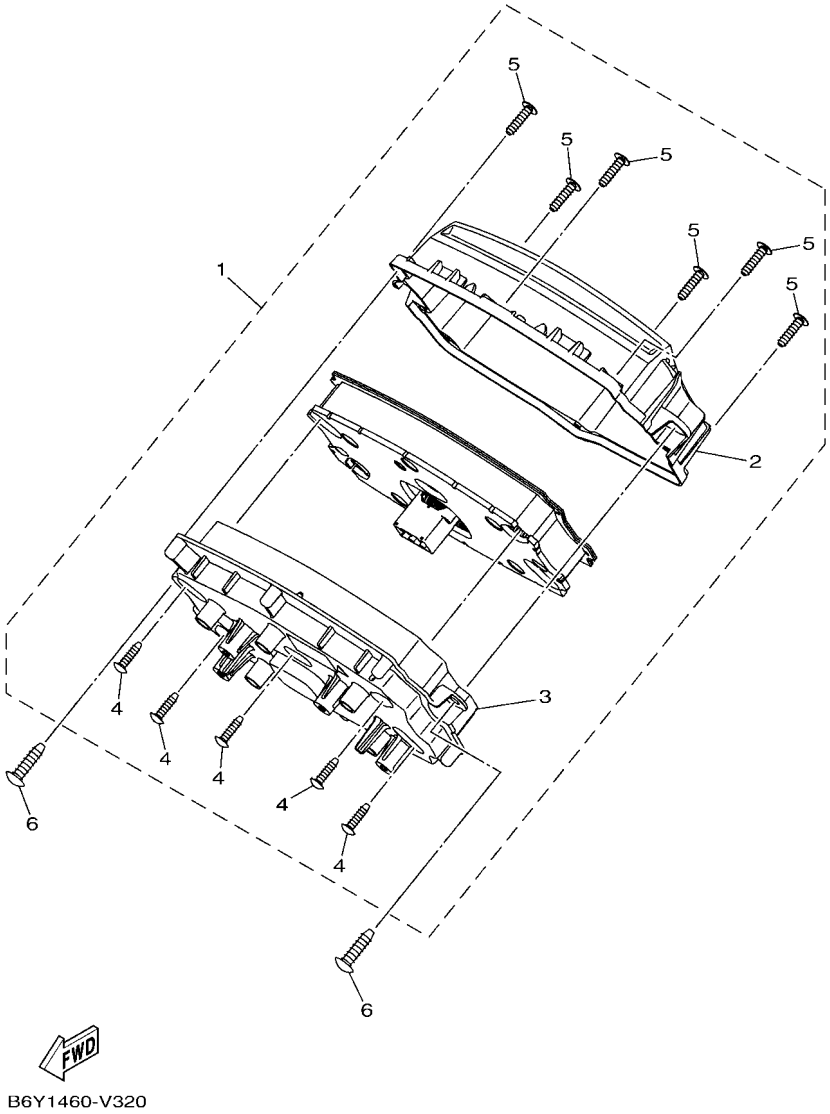

FIG. 32 MEDIDOR METER

REF. Nº	CODIGO Nº PART NO.	DESCRIPCION DESCRIPTION	BBE1					OBSERVACIONES REMARKS
1	B6Y–H3510–21	VELOCIMETRO COMPL. SPEEDOMETER ASSY	1					
2	B6H–H3511–00	.LENTE DE VELOCIMETRO .LENS, SPEEDOMETER	1					
3	B6H–H3572–01	.CAJA DE VELOCIMETRO INFERIOR .CASE, SPEEDOMETER LOWER	1					
4	97702–30016	.TORNILLO ROSCA HEMBRA .SCREW,TAPPING	5					
5	97707–30014	.TORNILLO ROSCA HEMBRA .SCREW, TAPPING	6					
6	97702–50016	TORNILLO ROSCA HEMBRA SCREW,TAPPING	2					

FIG. 33 FARO DELANTERO — HEADLIGHT

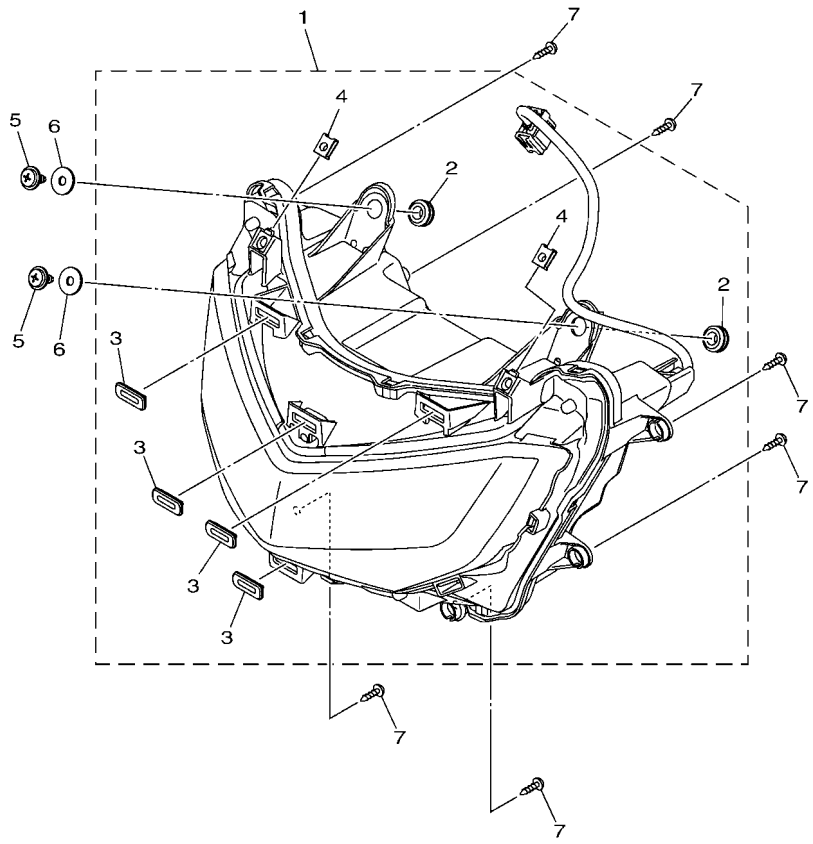

B6H1460-U340

REF. Nº	CODIGO Nº PART NO.	DESCRIPCION DESCRIPTION	BBE1					OBSERVACIONES REMARKS
1	B6H–H4300–00	FARO DELANTERO COMPLETO HEADLIGHT ASSY	1					
2	90480–13018	.TAPON .GROMMET	2					
3	50C–F6326–00	.TAPON PROTECTOR .GROMMET	4					
4	90183–05807	.TUERCA DE RESORTE .NUT, SPRING	2					
5	90159–06817	TORNILLO CON VALONA SCREW, WITH WASHER	2					
6	90201–06828	ARANDELA PLANA WASHER, PLATE	2					
7	97702–50016	TORNILLO ROSCA HEMBRA SCREW,TAPPING	6					

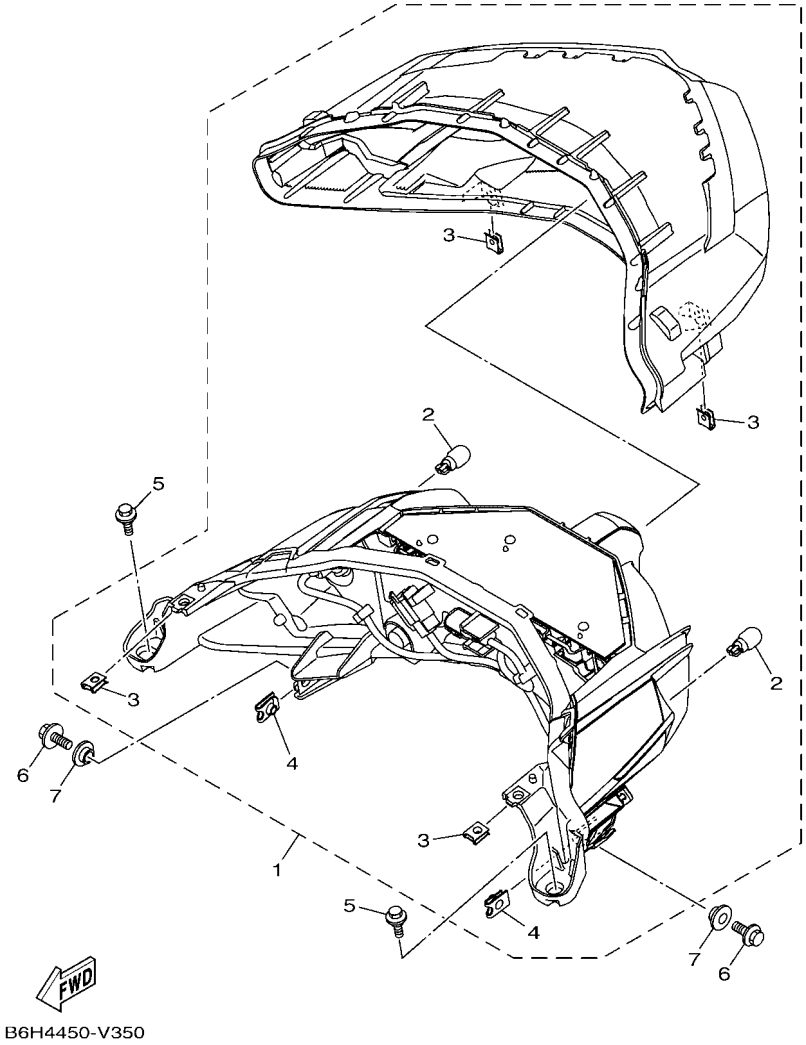

FIG. 34 LUZ DE COLA — TAILLIGHT

REF. Nº	CODIGO Nº PART NO.	DESCRIPCION DESCRIPTION	BBE1					OBSERVACIONES REMARKS
1	B6H–H4710–00	UNIDAD FARO TRASERO COMPL. TAILLIGHT UNIT ASSY	1					
2	2CB–H3311–00	.BOMBILLA (12V-10W) .BULB, FLASHER (12V-10W)	2					
3	90183–05807	.TUERCA DE RESORTE .NUT, SPRING	4					
4	90183–06818	.TUERCA DE RESORTE .NUT, SPRING	2					
5	90109–068B2	PERNO BOLT	2					
6	95827–06016	TORNILLO BOLT, FLANGE	2					
7	90387–068T3	ESPACIADOR COLLAR	2					

FIG. 35 INTERRUPTOR DE MANILLAR&PALANC HANDLE SWITCH & LEVER

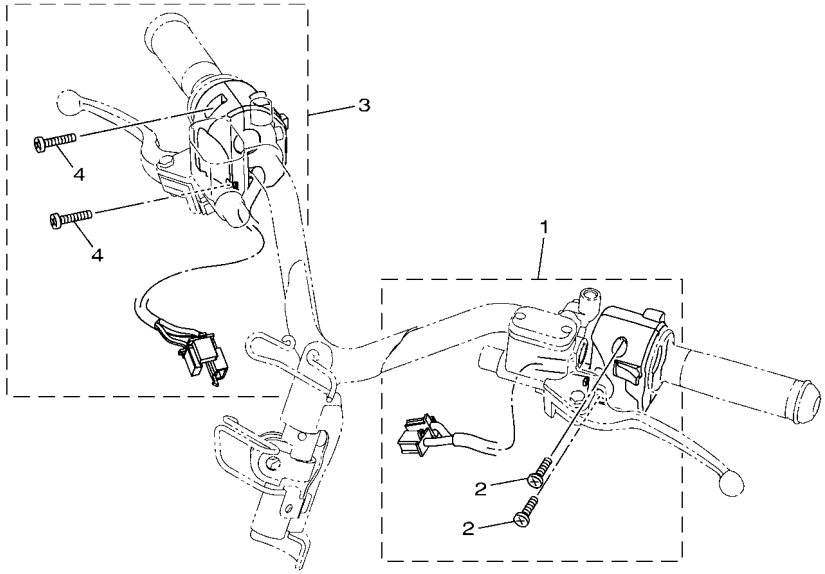

B6H1460-U360

REF. Nº	CODIGO Nº PART NO.	DESCRIPCION DESCRIPTION	BBE1					OBSERVACIONES REMARKS
1	B6H–H3972–00	INTERRUPTOR DE MANIJA 4 SWITCH, HANDLE 4	1					
2	98507–05025	.TORNILLO DE CABEZA PLANA .SCREW, PAN HEAD	2					
3	B3F–H3973–01	INTERRUPTOR DE MANIJA 3 SWITCH, HANDLE 3	1					
4	98507–05025	.TORNILLO DE CABEZA PLANA .SCREW, PAN HEAD	2					

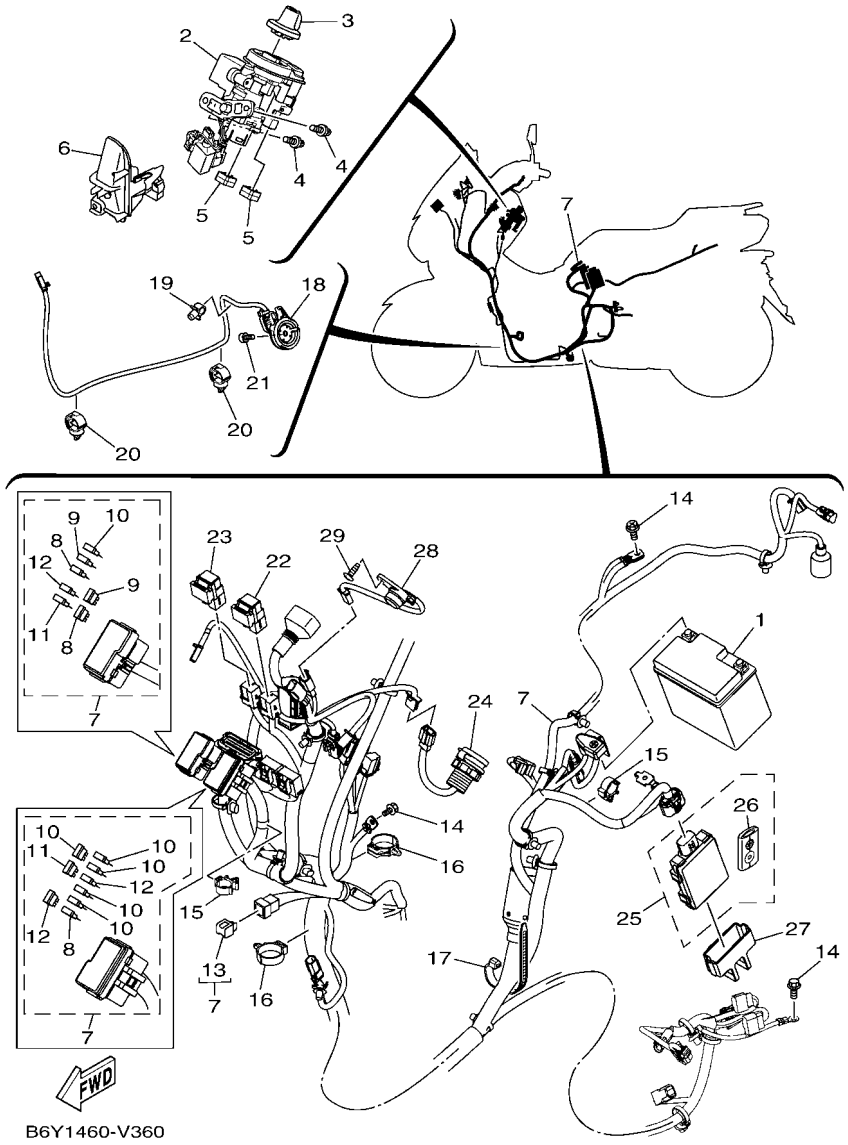

FIG. 36 EQUIPO ELECTRICO 1 — ELECTRICAL 1

REF. Nº	CODIGO Nº PART NO.	DESCRIPCION DESCRIPTION	BBE1					OBSERVACIONES REMARKS
1	BN1–H2100–10	BATERIA COMPLETA (YUASA YTZ6V) BATTERY ASSY (YUASA YTZ6V)	1					
2	B6H–H2501–01	LLAVE DE IGNICION COMPLT MAIN SWITCH STEERING LOCK	1					
3	B6H–H276E–00	BOTON COMP KNOB COMP.	1					
4	90109–06318	PERNO BOLT	2					
5	90464–09806	BRIDA CLAMP	2					
6	B6H–H2568–00	CUBIERTA INTERRUPTOR PRINC. COVER, MAIN SWITCH	1					
7	BBE–H2590–00	CONJUNTO DE CABLES WIRE HARNESS ASSY	1					
8	1WD–H2151–80	.FUSIBLE (2A) .FUSE (2A)	3					
9	1WD–H2151–90	.FUSIBLE (5A) .FUSE (5A)	2					
10	1WD–H2151–20	.FUSIBLE (7.5A BL) .FUSE (7.5A BL)	6					
11	1WD–H2151–10	.FUSIBLE (15A-BL) .FUSE (15A-BL)	2					
12	1WD–H2151–30	.FUSIBLE (30A) .FUSE (30A)	3					
13	3WP–81980–00	.CONJUNTO DIODO .DIODE ASSY	1					
14	95E32–06012	CERROJO, REBORDE HUECO PROFUND BOLT, FLANGE DEEP RECESS	3					
15	90464–16808	BRIDA CLAMP	2					
16	90464–30001	BRIDA CLAMP	2					
17	90464–65801	BRIDA CLAMP	1					
18	B8A–H2566–00	INTERRUPTOR SWITCH, SIDE STAND	1					
19	90464–07805	BRIDA CLAMP	1					
20	90464–13249	BRIDA CLAMP	2					
21	90110–06881	TORNILLO ALLEN BOLT, HEXAGON SOCKET HEAD	1					
22	BK6–H1950–00	RELE COMPLETO RELAY ASSY	1					
23	B3F–H1950–10	RELE COMPLETO RELAY ASSY	1					
24	B6H–H254B–00	TERMINAL COMPLETO TERMINAL COMP.	1					
25	B2T–H6260–01	UNIDAD DE CONTROL REMOTO COMPL REMOTE CONTROL UNIT ASSY	1					
26	B2T–H6261–00	.XMTR. COMP. .XMTR. COMP.	1					
27	B65–H5546–00	BANDA BAND	1					

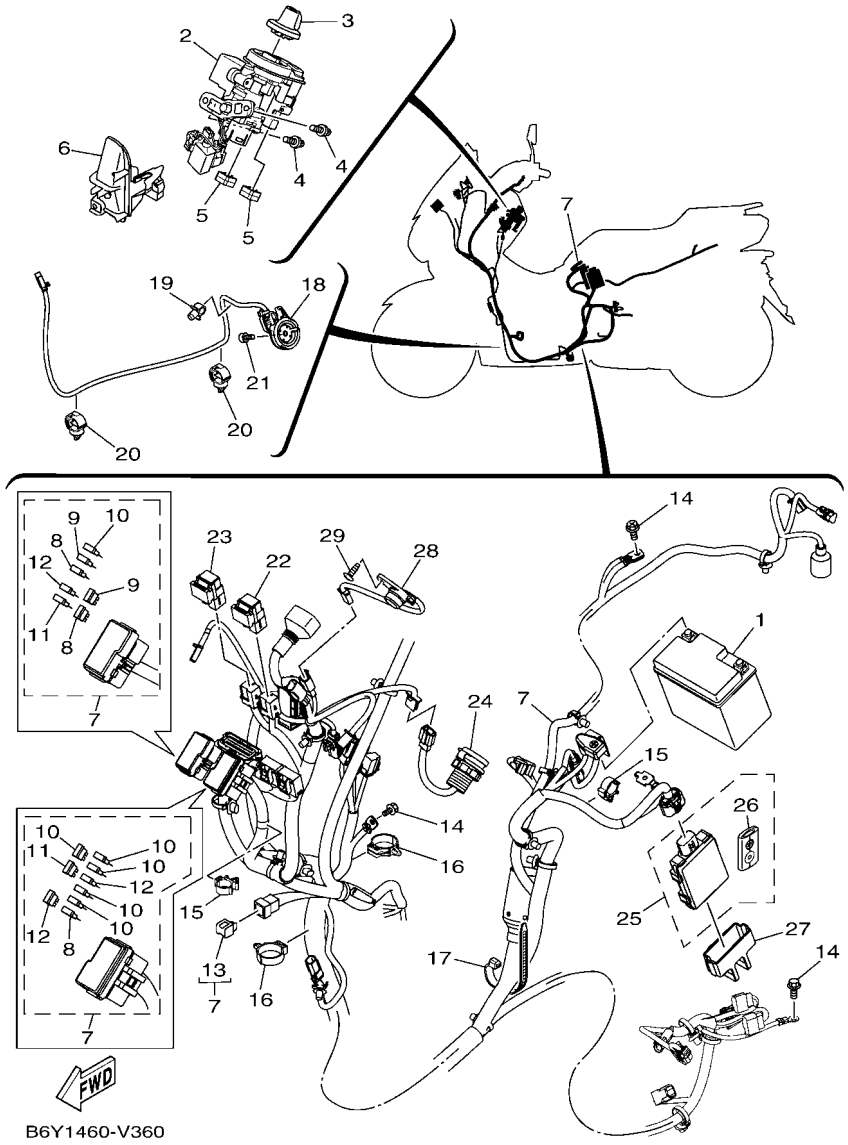

FIG. 36 EQUIPO ELECTRICO 1 — ELECTRICAL 1

REF. Nº	CODIGO Nº PART NO.	DESCRIPCION DESCRIPTION	BBE1					OBSERVACIONES REMARKS
28	B3F–H3383–00	ZUMBADOR BUZZER	1					
29	97702–50016	TORNILLO ROSCA HEMBRA SCREW,TAPPING	1					

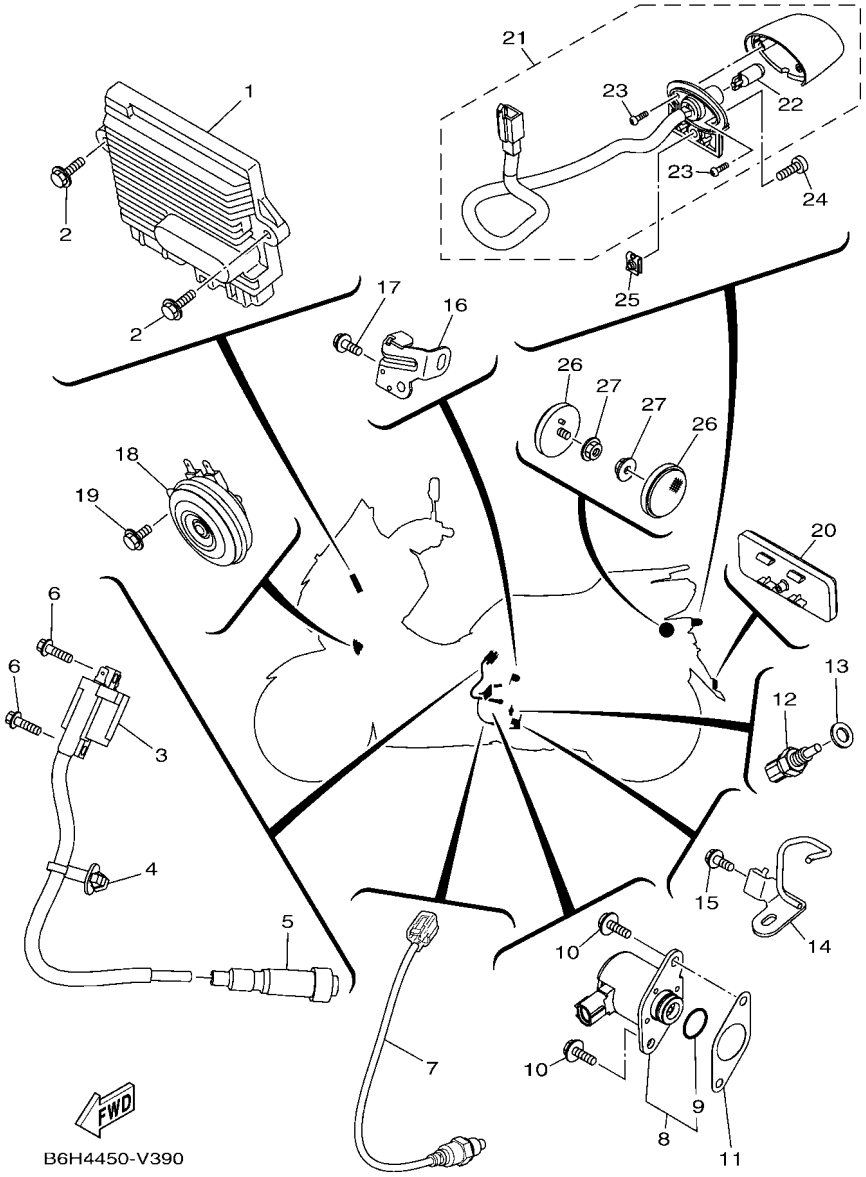

FIG. 37 EQUIPO ELECTRICO 2 — ELECTRICAL 2

REF. Nº	CODIGO Nº PART NO.	DESCRIPCION DESCRIPTION	BBE1					OBSERVACIONES REMARKS
1	B6Y–H594A–20	UNIDAD DE CONTROL DEL GENERADO STARTER GEN. CONT. UNIT ASSY	1					
2	95D32–06020	CERROJO, REBORDE HUECO PROFUND BOLT, FLANGE DEEP RECESS	2					
3	B6H–H2310–00	BOBINA DE ENCENDIDO COMPLETA IGNITION COIL ASSY	1					
4	90464–14809	BRIDA CLAMP	1					
5	BK6–H2370–00	TAPON DE BUJIA COMPLT PLUG CAP ASSY	1					
6	95E32–06020	CERROJO, REBORDE HUECO PROFUND BOLT, FLANGE DEEP RECESS	2					
7	2DP–H592A–20	SENSOR SENSOR, OXYGEN	1					
8	BK6–H6110–00	SOLENOIDE SOLENOID	1					
9	BK6–H1847–00	.ANILLO GOMA .O-RING	1					
10	95D32–06016	CERROJO, REBORDE HUECO PROFUND BOLT, FLANGE DEEP RECESS	2					
11	2DP–H1861–00	EMPAQUETADURA GASKET	1					
12	54P–H3591–00	UNIDAD TERMOSTATO THERMO UNIT	1					
13	90430–10806	JUNTA GASKET	1					
14	B6H–E5142–00	GUIA 1. GUIDE 1	1					
15	95E37–06012	CERROJO, REBORDE HUECO PROFUND BOLT, FLANGE DEEP RECESS	1					
16	B6H–E5143–00	GUIA GUIDE 2	1					
17	95E37–06012	CERROJO, REBORDE HUECO PROFUND BOLT, FLANGE DEEP RECESS	1					
18	B6Y–H3371–01	BOCINA HORN	1					
19	95D02–06012	CERROJO, REBORDE HUECO PROFUND BOLT, FLANGE DEEP RECESS	1					
20	54P–H5130–00	REFLECTOR TRASERO COMPLETO REAR REFLECTOR ASSY	1					
21	B6H–H4740–00	LUZ DE LICENCIA COMPLETA LICENCE LIGHT ASSY	1					
22	2ND–H4744–00	.BOMBILLA (12V-5W) .BULB (12V-5W)	1					
23	1CK–H4726–00	.TORNILLO .SCREW	2					
24	98907–04014	TORNILLO DE LIGAR SCREW, BIND	1					
25	90183–04039	TUERCA DE RESORTE NUT, SPRING	1					
26	2FC–H5111–00	REFLECTOR DELANTERA 1 REFLECTOR, 1	2					
27	95707–05500	TUERCA DE BRIDA NUT, FLANGE	2					

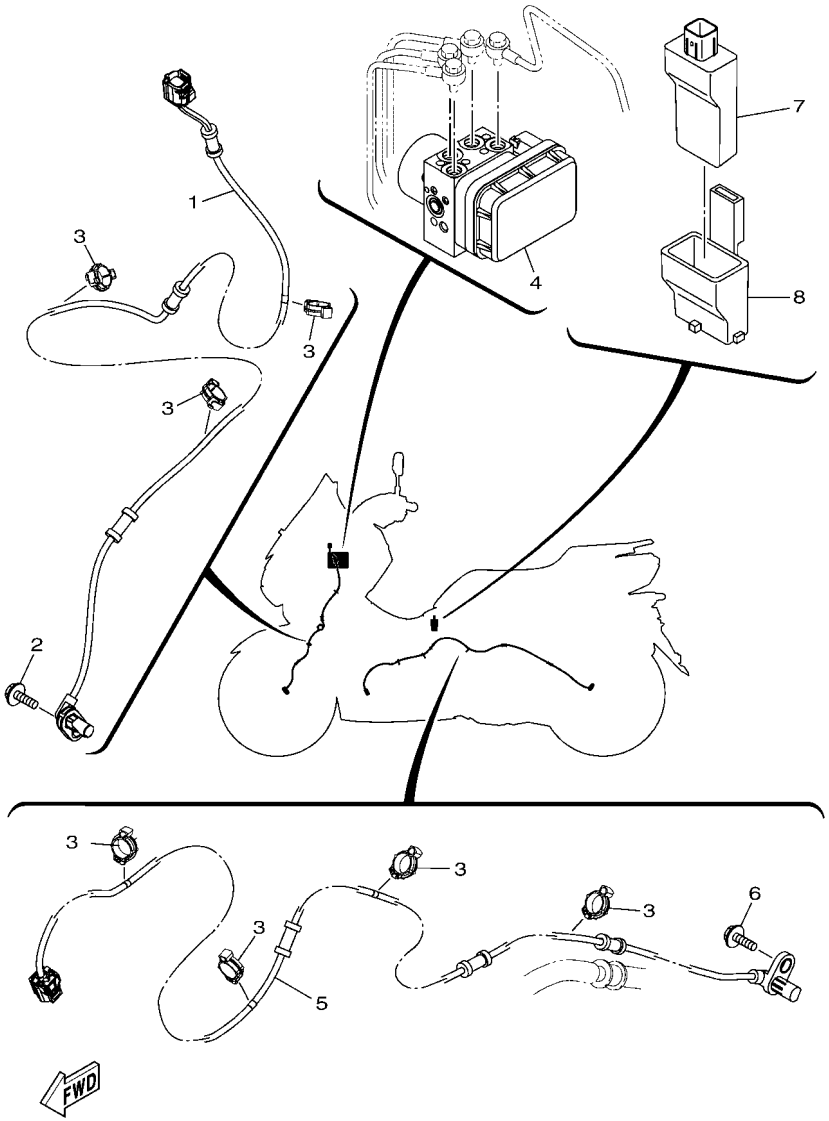

FIG. 38 EQUIPO ELECTRICO 3 — ELECTRICAL 3

REF. Nº	CODIGO Nº PART NO.	DESCRIPCION DESCRIPTION	BBE1					OBSERVACIONES REMARKS
1	B6H–H5970–00	CONJUNTO DE CABLES WHEEL SENSOR ASSY, FRONT	1					
2	95D32–06016	CERROJO, REBORDE HUECO PROFUND BOLT, FLANGE DEEP RECESS	1					
3	90464–14803	BRIDA CLAMP	7					
4	B6H–H5930–09	UNIDAD DE HIDRAULICA HYDRAULIC UNIT ASSY	1					
5	B6H–H5980–00	CONJUNTO DE CABLES WHEEL SENSOR ASSY, REAR	1					
6	95D32–06016	CERROJO, REBORDE HUECO PROFUND BOLT, FLANGE DEEP RECESS	1					
7	B6Y–H5810–00	UNIDAD CONTROL COMUNICACION COMMUNICATION CONT. UNIT ASSY	1					
8	B6Y–H5546–00	BANDA BAND	1					

INDICE NUMERICO
NUMERICAL INDEX

CODIGO Nº PART NO.	REF. Nº
52S–12439–00	6 – 2
4G0–21639–00	28 – 48
3Y6–23114–00	18 – 15
	18 – 31
2K5–23152–00	18 – 9
	18 – 25
3WP–81980–00	36 – 13
B6H–E1102–00	1 – 1
2DP–E111F–00	3 – 18
B63–E111F–00	3 – 18
2DP–E1133–10	1 – 2
2DP–E1165–00	1 – 8
B6H–E1166–00	8 – 35
2DP–E1169–00	1 – 9
2DP–E1181–00	1 – 21
B6H–E1185–00	5 – 4
2DP–E1191–00	1 – 7
B3F–E1193–00	1 – 15
B6H–E1311–00	1 – 25
2DP–E132G–00	1 – 13
B6H–E1351–00	1 – 26
2DP–E1391–00	1 – 18
2DP–E1392–00	1 – 19
B6H–E1400–10	2 – 1
B63–E1603–00	2 – 9
BK6–E1631–00	2 – 6
2DP–E1633–00	2 – 7
2DP–E1651–00	2 – 4
B63–E1681–00	2 – 2
BK6–E2111–00	3 – 1
BB8–E2113–01	3 – 4
2DP–E2117–00	3 – 6
5TL–E2118–00	3 – 5
54P–E2119–00	3 – 3
B3F–E2121–00	3 – 2
50C–E2126–00	3 – 7
2DP–E2150–00	3 – 8
B65–E2156–00	3 – 16
5YP–E2157–01	4 – 6
33S–E2159–01	3 – 9
	3 – 14
B6H–E2160–00	3 – 13
B6H–E2170–00	4 – 1
2PV–E2210–01	4 – 11
B6H–E2213–00	4 – 12
B6H–E2223–00	5 – 2
BB8–E2226–00	3 – 11
1DB–E2228–00	4 – 10

CODIGO Nº PART NO.	REF. Nº
B65–E2231–00	4 – 8
B6H–E2241–00	4 – 9
2DP–E2279–00	3 – 12
B63–E2279–00	3 – 12
B6H–E2280–00	4 – 4
2DP–E2288–00	4 – 5
B6H–E2288–00	4 – 5
B63–E22A2–00	6 – 6
B6H–E240A–01	6 – 4
2DP–E2410–00	6 – 1
B6H–E2422–00	5 – 1
B63–E2439–00	6 – 7
B6H–E2439–00	5 – 3
B6H–E2450–00	5 – 5
B65–E2462–02	6 – 5
B6H–E2467–00	6 – 25
B6H–E2481–00	6 – 17
B6H–E2482–00	6 – 18
B6H–E2483–00	6 – 19
B6H–E2491–00	6 – 20
B65–E2611–00	6 – 27
5ST–E2615–00	6 – 9
B6H–E2621–00	6 – 21
5ST–E2843–00	6 – 10
B63–E2843–00	6 – 8
B65–E3300–01	7 – 1
54P–E3411–00	7 – 4
2DP–E3556–00	8 – 12
B6H–E3585–00	8 – 1
B65–E3750–10	8 – 13
BB8–E3761–10	8 – 6
5LW–E3769–00	10 – 15
BB8–E3770–10	8 – 5
B6H–E3907–00	19 – 5
54P–E3915–00	19 – 6
54P–E3938–00	8 – 9
B6H–E3971–00	19 – 4
54P–E4137–00	8 – 10
B6H–E4146–00	8 – 4
54P–E4147–00	8 – 7
5CA–E4147–00	8 – 8
54P–E416A–00	8 – 18
B6H–E4199–00	8 – 2
54P–E4243–00	8 – 15
54P–E4335–00	8 – 16
B6H–E4411–10	8 – 20
B6H–E4412–10	8 – 21
B6H–E4435–00	8 – 31

CODIGO Nº PART NO.	REF. Nº
B6H–E4437–00	8 – 22
4ST–E443E–00	11 – 6
5TL–E443E–00	8 – 27
B5D–E443G–00	8 – 28
B74–E4449–00	8 – 30
B6H–E4451–00	8 – 24
B6H–E4452–00	8 – 25
B6H–E4453–00	8 – 23
2DP–E4613–00	9 – 4
B6H–E4711–00	9 – 1
B6H–E4718–00	9 – 2
B6H–E5142–00	37 – 14
B6H–E5143–00	37 – 16
B6H–E5150–00	10 – 1
B6H–E5316–00	11 – 14
B6H–E5326–00	11 – 15
B6H–E533C–00	11 – 20
B6H–E533E–00	11 – 22
54P–E5351–00	7 – 3
2DP–E5362–00	10 – 14
5LW–E5363–00	10 – 16
B6H–E5371–00	10 – 29
5LW–E5371–01	11 – 5
B6H–E5373–00	10 – 30
2DP–E5407–00	11 – 11
B6H–E5411–00	11 – 1
B6H–E5421–00	10 – 24
B65–E5423–00	10 – 18
B6H–E5431–00	11 – 8
B6H–E5451–00	11 – 2
B6H–E5461–10	10 – 25
B65–E5472–00	11 – 10
2DP–E5474–00	11 – 13
B63–E5481–00	11 – 12
2DP–E5495–00	11 – 9
2DP–E5744–00	12 – 19
B65–E6111–00	13 – 9
B65–E6111–10	13 – 9
B65–E6611–00	12 – 21
B6H–E6620–00	12 – 7
B65–E6626–00	12 – 8
2DP–E7211–00	13 – 4
2DP–E7211–10	13 – 4
2DP–E7410–01	13 – 1
2DP–E7410–10	13 – 1
2DP–E7410–20	13 – 1
2DP–E7410–30	13 – 1
B6H–E7421–00	13 – 3

CODIGO Nº PART NO.	REF. Nº
2DP–E7465–00	12 – 11
2DP–E7465–10	12 – 12
2DP–E7611–00	12 – 6
B65–E7620–00	12 – 1
2DP–E7623–00	12 – 3
B65–E7632–00	12 – 2
B65–E7641–00	12 – 22
44D–E7653–00	12 – 4
B6H–E7660–00	12 – 9
B74–E7664–00	12 – 13
2DP–E7668–00	12 – 17
B6H–E7670–00	12 – 10
B6H–E7674–00	12 – 5
2DP–E7674–10	12 – 14
B6H–E7678–00	12 – 18
2DP–E7678–10	12 – 20
B65–E7683–00	12 – 15
2DP–E7684–00	12 – 16
BBE–F1110–00	14 – 1
B65–F113B–00	14 – 9
B65–F117G–00	14 – 6
B65–F117K–00	15 – 13
B6H–F131C–00	28 – 45
5TP–F139X–00	19 – 20
B6H–F1410–00	14 – 5
BK3–F1511–00–P4	15 – 1
BK3–F1511–00–P5	15 – 1
BK3–F1511–00–P6	15 – 1
B6H–F1552–00	15 – 4
BBE–F1568–00	28 – 50
B6H–F1611–00	15 – 6
B6H–F1621–00	20 – 35
B6H–F162R–00	15 – 9
BBE–F1651–00–P0	16 – 15
BBE–F1651–00–P1	16 – 15
BBE–F1651–00–P2	16 – 15
BK3–F1668–00	20 – 42
BBE–F1711–00–P0	16 – 1
BBE–F1711–00–P1	16 – 1
BBE–F1711–00–P2	16 – 1
B6H–F171E–00	16 – 9
BBE–F171L–00–P0	27 – 29
BBE–F171L–00–P1	27 – 29
BBE–F171L–00–P2	27 – 29
BBE–F171M–00–P0	27 – 31
BBE–F171M–00–P1	27 – 31
BBE–F171M–00–P2	27 – 31
B6H–F171X–00	16 – 11

CODIGO Nº PART NO.	REF. Nº
BBE–F1721–00–P0	16 – 5
BBE–F1721–00–P1	16 – 5
BBE–F1721–00–P2	16 – 5
2DP–F172W–00	27 – 28
BBE–F1731–00–P0	16 – 18
BK3–F1737–00	25 – 26
BK3–F1737–10	25 – 27
BK3–F173B–00	16 – 34
BBE–F173E–00	16 – 35
BK3–F173E–00	16 – 35
BK3–F173E–20	16 – 35
BBE–F1741–00–P0	16 – 21
B6H–F1746–00	16 – 25
B6H–F177E–00	28 – 22
B6H–F1796–00	28 – 30
B6H–F1816–00	16 – 29
B6H–F1817–00	16 – 31
B65–F1871–00	16 – 24
1S7–F1875–01	16 – 28
B6H–F194U–00	26 – 46
2DP–F2117–00	17 – 6
B65–F2141–00	14 – 10
B6H–F2171–00	17 – 1
BBB–F2210–00	17 – 14
5MX–F2216–00	10 – 5
B6H–F2403–00	18 – 34
B6H–F247A–00	27 – 6
B6H–F247B–00	27 – 12
B6H–F247C–00	20 – 19
BBE–F2865–00–P0	29 – 20
BBE–F2865–00–P1	29 – 20
BBE–F2865–00–P2	29 – 20
BBE–F286F–00–P0	28 – 1
BBE–F286F–00–P1	28 – 1
BBE–F286F–00–P2	28 – 1
B6H–F3100–00	18 – 1
B6H–F3102–00	18 – 2
B6H–F3103–00	18 – 18
2DP–F3110–00	18 – 7
	18 – 23
2DP–F3111–00	18 – 16
	18 – 32
B65–F3123–00	18 – 48
2DP–F3126–00	18 – 3
B6H–F312G–00	18 – 47
2DP–F3136–00	18 – 19
B6H–F3141–00	18 – 14
	18 – 30

CODIGO Nº PART NO.	REF. Nº
3HB–F3144–00	18 – 6
	18 – 22
3HB–F3145–00	18 – 4
	18 – 20
2DP–F3153–00	18 – 17
	18 – 33
3V3–F3156–00	18 – 5
	18 – 21
2DP–F3157–00	18 – 10
	18 – 26
2BU–F3158–00	18 – 12
	18 – 28
2DP–F3170–00	18 – 8
	18 – 24
2DP–F3173–00	18 – 11
	18 – 27
278–F3181–50	18 – 13
	18 – 29
5YW–F3346–10	18 – 37
4RT–F3411–10	18 – 40
4RT–F3412–10	18 – 39
B65–F3415–00	18 – 43
3AY–F3416–00	18 – 42
1SK–F3418–00	18 – 46
1P6–F341E–10	18 – 41
B63–F3462–00	18 – 35
2TD–F3873–00	18 – 38
2TD–F3875–00	18 – 36
BBE–F4110–00	19 – 1
BK3–F413B–00	28 – 49
B6H–F414A–01	19 – 12
5D9–F414G–00	14 – 4
	15 – 2
	19 – 19
54P–F414G–10	19 – 8
B6H–F419A–00	19 – 16
B6H–F4217–00	19 – 13
B6H–F4318–01	19 – 14
B6H–F4491–00	19 – 9
B6H–F4494–00	28 – 43
B6H–F4610–01	19 – 11
B5D–F465B–00	15 – 11
B65–F465E–00	15 – 12
BBE–F470F–00	20 – 2
B74–F4727–00	20 – 16
B6H–F472A–00	20 – 18
B6H–F472T–00	20 – 25
BBE–F4730–00	20 – 1

INDICE NUMERICO
NUMERICAL INDEX

CODIGO Nº PART NO.	REF. Nº
B6Y–F473R–00	20 – 7
45D–F4741–00	20 – 4
5BP–F4741–00	20 – 3
B6H–F475M–00	20 – 5
1S7–F4768–00	20 – 24
B6H–F4769–00	20 – 12
BBE–F4773–00–P0	20 – 27
B65–F4780–00	20 – 22
B6H–F478E–00	20 – 21
B6H–F479D–00	20 – 39
B6H–F4811–00	20 – 14
B6H–F5168–00–33	21 – 1
2DP–F517G–00	21 – 5
	23 – 2
2DP–F5181–00	21 – 10
B6H–F5338–00–33	23 – 1
B6H–F5522–00	26 – 44
2BM–F5802–00	22 – 4
5P0–F5802–00	24 – 4
5YP–F5803–50	22 – 5
	24 – 5
2DP–F5805–00	22 – 9
B6H–F5805–00	24 – 9
2DP–F5807–00	26 – 2
2DP–F5807–10	26 – 22
B6H–F580U–00	22 – 3
B6H–F580W–00	24 – 3
B6H–F581J–00	26 – 38
5P0–F5827–00	24 – 15
B8A–F5827–00	22 – 15
2DP–F582U–00	22 – 1
2DP–F582W–00	24 – 1
B6H–F583T–00	26 – 1
B6H–F583V–00	26 – 21
2DP–F5852–00	26 – 3
	26 – 23
5HV–F5854–10	26 – 5
	26 – 25
5HV–F585B–10	26 – 4
	26 – 24
2DP–F5867–00	26 – 30
2DP–F5867–10	26 – 10
B6H–F5872–00	26 – 15
B6H–F5873–00	26 – 18
B6H–F5874–00	26 – 34
B6H–F5875–00	18 – 49
B6H–F5876–00	18 – 51
B6H–F587A–00	26 – 48

CODIGO Nº PART NO.	REF. Nº
B6H–F5886–00	17 – 11
B6H–F5887–00	26 – 42
B6H–F588F–00	14 – 26
B6H–F588G–10	17 – 8
2DP–F589F–00	26 – 8
	26 – 28
2R6–F5916–00	22 – 14
	24 – 14
2BM–F5917–00	22 – 6
5YP–F5917–00	24 – 6
2BM–F5919–00	22 – 11
5P0–F5919–01	24 – 11
2DP–F5920–00	22 – 13
2DP–F5920–50	24 – 13
5YP–F5924–00	22 – 12
	24 – 12
5YP–F5925–01	22 – 10
	24 – 10
5YP–F5937–00	22 – 7
	24 – 7
B6H–F6110–01	25 – 1
B6H–F6143–00	25 – 16
B6H–F6144–00	25 – 22
4US–F6199–00	20 – 11
B1T–F61AA–00	29 – 1
BBE–F6219–00–P0	25 – 19
B6H–F6240–00	25 – 4
2DP–F6241–00	25 – 5
2PH–F6246–00	25 – 6
B6H–F6257–00	26 – 14
2DP–F6280–10	25 – 7
2DP–F6290–10	25 – 8
B6H–F6301–00	25 – 9
50C–F6326–00	33 – 3
1S9–F6332–00	26 – 11
	26 – 31
B6H–F7111–00	27 – 1
B6H–F7112–00	27 – 2
44D–F7114–00	14 – 14
54P–F7114–00	27 – 4
	27 – 13
54P–F7121–00	10 – 3
B65–F7217–00	27 – 9
1LB–F7254–00	27 – 7
BBE–F7311–00	27 – 8
BBE–F741L–00	27 – 40
B6H–F7426–00	28 – 42
BBE–F742L–00	27 – 50

CODIGO Nº PART NO.	REF. Nº
BBE–F7430–00	27 – 39
BK3–F7431–00	27 – 41
2DP–F7437–01	27 – 47
	27 – 57
BBE–F7440–00	27 – 49
BK3–F7441–00	27 – 51
B6H–F7456–00	28 – 46
B6H–F7481–00	27 – 14
B6H–F7483–00	27 – 35
B6H–F7484–00	27 – 36
B6H–F7488–00	27 – 21
B6H–F7493–00	27 – 37
B6H–F7494–00	27 – 38
B6H–F74A8–00	28 – 40
2DP–F814F–00	20 – 40
3AY–F8152–00	20 – 41
B6H–F8311–00	28 – 16
BBE–F8312–00–P0	28 – 36
B6H–F8321–00	28 – 24
BBE–F8351–00–P0	28 – 3
BBE–F8351–00–P1	28 – 3
BBE–F8351–00–P2	28 – 3
B6H–F8356–00	14 – 18
B6H–F835U–00	28 – 9
B6H–F835V–00	28 – 12
B6H–F836K–00	28 – 20
B6H–F836X–00	28 – 32
BBE–F8377–00–P0	28 – 6
BBE–F8377–00–P1	28 – 6
BBE–F8377–00–P2	28 – 6
B6H–F837L–00	29 – 7
B6H–F837M–00	29 – 16
B6H–F8385–00	27 – 33
B6H–F838K–00	28 – 25
B6H–F838M–00	28 – 27
B6H–F839K–00	28 – 44
B6H–F8428–00	29 – 15
	29 – 19
B6H–F842M–00	28 – 38
B6H–F842N–00	20 – 37
BBE–F843G–00	15 – 16
B6H–H1410–00	30 – 2
B6H–H1450–00	30 – 1
BK6–H1847–00	37 – 9
2DP–H1861–00	37 – 11
BK6–H1950–00	36 – 22
B3F–H1950–10	36 – 23
BN1–H2100–10	36 – 1

CODIGO Nº PART NO.	REF. Nº
B6H–H2129–10	20 – 33
1WD–H2151–10	36 – 11
1WD–H2151–20	36 – 10
1WD–H2151–30	36 – 12
1WD–H2151–80	36 – 8
1WD–H2151–90	36 – 9
B6H–H2310–00	37 – 3
BK6–H2370–00	37 – 5
B6H–H2501–01	36 – 2
B6H–H251P–00	14 – 2
B6H–H2530–00	26 – 32
B6H–H254B–00	36 – 24
B8A–H2566–00	36 – 18
B6H–H2568–00	36 – 6
BBE–H2590–00	36 – 7
B6H–H276E–00	36 – 3
B6H–H3310–00	31 – 1
2CB–H3311–00	31 – 2
	31 – 9
	34 – 2
B6H–H3312–00	31 – 3
B6H–H3320–00	31 – 8
B6H–H3322–00	31 – 10
B6Y–H3371–01	37 – 18
B3F–H3383–00	36 – 28
B6Y–H3510–21	32 – 1
B6H–H3511–00	32 – 2
BBE–H3559–00–P0	29 – 4
B6H–H3572–01	32 – 3
54P–H3591–00	37 – 12
2DP–H3912–00	26 – 27
2DP–H3922–00	26 – 7
B6H–H3972–00	35 – 1
B3F–H3973–01	35 – 3
B6H–H3980–00	26 – 12
B6H–H4140–00	31 – 5
B6H–H4150–00	31 – 12
B6H–H4300–00	33 – 1
B6H–H4710–00	34 – 1
B6H–H4716–00	16 – 13
B6H–H4723–00	31 – 4
	31 – 11
1CK–H4726–00	37 – 23
B6H–H4740–00	37 – 21
2ND–H4744–00	37 – 22
2FC–H5111–00	37 – 26
54P–H5130–00	37 – 20
B65–H5546–00	36 – 27

CODIGO Nº PART NO.	REF. Nº
B6Y–H5546–00	38 – 8
BK6–H5752–00	19 – 7
B63–H5801–00	8 – 17
B6Y–H5810–00	38 – 7
2DP–H592A–20	37 – 7
B6H–H5930–09	38 – 4
B6Y–H594A–20	37 – 1
B6H–H5970–00	38 – 1
B6H–H5980–00	38 – 5
BK6–H6110–00	37 – 8
B2T–H6260–01	36 – 25
B2T–H6261–00	36 – 26
4C9–W0048–00	22 – 8
	24 – 8
90105–068C5	14 – 24
90105–088E3	14 – 16
90105–088E8	17 – 15
90105–10283	14 – 12
90105–10896	25 – 2
90105–108C1	17 – 16
90109–06318	14 – 3
	36 – 4
90109–068A4	15 – 3
90109–068B2	15 – 7
	16 – 26
	20 – 9
	27 – 17
	27 – 24
	29 – 11
	34 – 5
90109–068C7	15 – 8
90109–08232	22 – 2
	24 – 2
90110–06378	1 – 24
90110–06846	8 – 19
90110–06880	30 – 3
90110–06881	36 – 21
90111–05816	20 – 38
90111–06860	9 – 3
90119–06051	27 – 16
	27 – 23
90119–06212	20 – 20
90119–068B7	19 – 2
90149–05030	21 – 6
	23 – 3
90149–05801	1 – 10
90149–06104	25 – 21
90149–10805	22 – 16

CODIGO Nº PART NO.	REF. Nº
90150–05008	29 – 2
90159–05032	25 – 24
90159–06817	33 – 5
90160–05009	28 – 11
	28 – 14
	29 – 13
	29 – 18
90160–05014	25 – 25
90160–05810	16 – 19
	16 – 22
90170–05803	3 – 10
	3 – 15
90170–12802	12 – 26
90179–05003	14 – 20
90179–12004	12 – 25
	30 – 5
90179–25810	18 – 44
90183–04039	37 – 25
90183–05807	16 – 2
	16 – 6
	20 – 10
	27 – 19
	27 – 26
	28 – 4
	28 – 7
	28 – 10
	28 – 13
	28 – 19
	28 – 23
	28 – 41
	29 – 5
	29 – 14
	29 – 17
	29 – 21
	33 – 4
	34 – 3
90183–06815	16 – 10
	16 – 12
90183–06818	15 – 15
	25 – 17
	34 – 4
90185–10011	25 – 3
90185–10012	21 – 11
90185–16800	23 – 6
90201–06828	33 – 6
90201–08859	1 – 17
90201–08884	20 – 29
90201–10118	26 – 17

INDICE NUMERICO
NUMERICAL INDEX

CODIGO Nº PART NO.	REF. Nº
90201–10118	26 – 20
	26 – 36
	26 – 40
90201–10831	21 – 12
90201–10853	17 – 17
90201–12688	30 – 4
90201–15847	12 – 30
90201–15849	12 – 24
90201–16819	12 – 23
90202–26142	18 – 45
90249–03017	28 – 34
90269–06812	20 – 36
90269–06816	15 – 5
	16 – 3
	16 – 7
	20 – 26
	25 – 23
	27 – 34
	28 – 2
	28 – 37
	29 – 10
90280–03017	2 – 5
90340–12813	1 – 3
90340–12816	10 – 10
90380–10800	12 – 28
90387–064H8	27 – 46
	27 – 56
90387–068N8	14 – 22
90387–068T3	34 – 7
90387–07391	28 – 18
90387–08821	14 – 15
90387–08823	6 – 11
90387–08847	20 – 30
90387–10277	21 – 9
90387–10839	21 – 2
90387–10857	14 – 8
90387–10867	20 – 31
90387–17807	17 – 5
90387–17808	17 – 9
90388–08803	10 – 5
	17 – 2
90388–10808	10 – 4
90388–10818	14 – 7
90401–10812	26 – 16
	26 – 19
	26 – 35
	26 – 39
90430–06803	1 – 5

CODIGO Nº PART NO.	REF. Nº
90430–06803	1 – 28
	5 – 9
90430–08804	10 – 13
90430–10806	37 – 13
90430–12803	10 – 11
90450–43805	8 – 34
90464–07014	26 – 37
90464–07018	16 – 16
90464–07805	16 – 33
	26 – 45
	36 – 19
90464–07807	25 – 15
90464–08009	25 – 10
90464–09806	36 – 5
90464–13249	36 – 20
90464–14002	19 – 18
90464–14803	38 – 3
90464–14809	37 – 4
90464–16006	17 – 13
90464–16808	25 – 13
	26 – 41
	28 – 15
	29 – 9
	36 – 15
90464–24230	25 – 14
90464–30001	16 – 30
	19 – 15
	36 – 16
90464–65801	36 – 17
90467–08003	16 – 32
90467–10008	10 – 31
90467–11106	11 – 7
90467–11825	8 – 36
	10 – 32
90467–12052	8 – 37
90467–12809	8 – 29
90467–19803	6 – 15
	6 – 16
90467–20806	6 – 14
90468–08086	20 – 13
90468–18121	20 – 17
90480–01559	16 – 4
	16 – 8
	27 – 15
	27 – 22
90480–13018	33 – 2
90480–14229	14 – 21
90480–14808	16 – 27

CODIGO Nº PART NO.	REF. Nº
90480–14825	28 – 17
90480–14833	6 – 12
90480–17802	14 – 25
90480–19802	20 – 32
90501–12743	27 – 44
	27 – 54
90501–16004	7 – 5
90506–20818	27 – 11
90506–23815	20 – 15
90506–40806	27 – 5
90508–12800	28 – 33
90520–02014	25 – 20
90520–02849	25 – 18
	27 – 20
	27 – 27
	29 – 3
90520–02850	29 – 6
90520–04806	20 – 8
90520–06817	28 – 29
90520–10851	11 – 18
90520–10853	6 – 22
90520–10854	16 – 20
90520–10855	6 – 23
	11 – 23
90520–10856	11 – 16
90520–15803	19 – 3
90520–15816	8 – 33
90520–15817	16 – 23
90520–20800	29 – 8
90520–40800	11 – 21
90520–40801	11 – 17
90520–50801	11 – 19
91312–05010	19 – 10
	25 – 12
91312–05016	3 – 17
91332–06025	8 – 3
91402–20012	27 – 42
	27 – 52
91702–06038	27 – 43
	27 – 53
92017–05016	25 – 11
93102–08800	1 – 14
93102–20815	13 – 11
93102–22829	10 – 9
93102–24802	10 – 19
93102–32807	13 – 8
93106–20816	21 – 3
93106–28801	17 – 3

CODIGO Nº PART NO.	REF. Nº
93210–09806	4 – 2
93210–14816	10 – 17
93210–19809	5 – 14
93210–29800	7 – 6
93210–39803	5 – 11
93211–28800	10 – 20
93300–608X0	5 – 7
93306–001YG	4 – 3
93306–254Y5	13 – 10
93306–255YA	13 – 7
93306–300YN	21 – 4
93306–302YU	13 – 2
93306–303YW	13 – 6
93306–303YX	17 – 4
93306–351Y8	13 – 12
93310–528YK	2 – 3
933A6–202Y0	12 – 27
93450–16115	2 – 8
93501–04830	27 – 45
	27 – 55
93900–00824	21 – 8
	23 – 5
94111–13803	21 – 7
94113–13809	23 – 4
94568–F9096	4 – 7
94700–00415	1 – 20
95022–06020	15 – 14
95027–06020	5 – 8
95302–10600	17 – 18
95332–08600	1 – 16
95602–06100	26 – 9
	26 – 29
95602–08200	14 – 17
95602–10200	14 – 11
	14 – 13
	27 – 10
95612–08618	1 – 6
95702–06500	20 – 6
95702–08500	9 – 5
95707–05500	37 – 27
95812–10030	24 – 16
95827–06016	34 – 6
95D02–06012	18 – 50
	18 – 52
	26 – 43
	37 – 19
95D32–06012	14 – 27
	17 – 12

CODIGO Nº PART NO.	REF. Nº
95D32–06016	6 – 28
	37 – 10
	38 – 2
	38 – 6
95D32–06020	14 – 23
	37 – 2
95D32–06025	28 – 35
95D32–06030	6 – 13
	8 – 11
	8 – 32
95D32–08035	10 – 12
	20 – 28
95D32–08050	14 – 19
95D32–10045	9 – 6
95D32–10060	9 – 7
	17 – 10
95D37–06016	17 – 7
95E32–06010	1 – 4
	1 – 27
95E32–06012	20 – 23
	26 – 47
	26 – 49
	36 – 14
95E32–06014	3 – 19
95E32–06020	4 – 13
	6 – 3
	6 – 26
	10 – 22
	37 – 6
95E32–06025	5 – 12
95E32–06030	1 – 11
	10 – 23
95E32–06035	11 – 4
95E32–06045	5 – 13
95E32–06050	6 – 24
95E32–06060	10 – 7
95E32–06110	10 – 8
95E32–08020	27 – 48
	27 – 58
95E32–08035	10 – 28
95E32–08045	10 – 27
95E37–06012	19 – 17
	37 – 15
	37 – 17
97602–04312	26 – 13
	26 – 33
97702–30016	32 – 4
97702–50014	31 – 6

CODIGO Nº PART NO.	REF. Nº
97702–50014	31 – 13
97702–50016	15 – 10
	16 – 17
	27 – 18
	27 – 25
	27 – 30
	27 – 32
	28 – 5
	28 – 8
	28 – 21
	28 – 26
	28 – 31
	28 – 39
	29 – 12
	29 – 22
	32 – 6
	33 – 7
	36 – 29
97707–30014	32 – 5
97707–50012	20 – 34
	28 – 28
	28 – 47
97707–50016	16 – 14
	31 – 7
	31 – 14
97707–50025	8 – 26
98502–05020	7 – 2
98502–06012	8 – 14
98507–05025	35 – 2
	35 – 4
98707–04012	26 – 6
	26 – 26
98907–04014	37 – 24
99002–09600	27 – 3
99009–08400	5 – 6
99009–25400	13 – 5
99009–35700	12 – 29
99480–03012	10 – 2
99530–08012	1 – 12
	5 – 10
99530–10114	1 – 22
	1 – 23
	10 – 6
	10 – 21
	10 – 26
	11 – 3